AD-236
Parts Manual
Phase 7

American Dryer Corporation
88 Currant Road
Fall River MA 02720-4781 USA
Telephone: +1 (508) 678-9000 / Fax: +1 (508) 678-9447
e-mail: techsupport@amdry.com

www.adclaundry.com

ADC Part No. 450255-7

Retain This Manual In A Safe Place For Future Reference

American Dryer Corporation products embody advanced concepts in engineering, design, and safety. If this product is properly maintained, it will provide many years of safe, efficient, and trouble free operation.

ONLY qualified technicians should service this equipment.

OBSERVE ALL SAFETY PRECAUTIONS displayed on the equipment or specified in the installation manual included with the dryer.

The following "**FOR YOUR SAFETY**" caution must be posted near the dryer in a prominent location.

FOR YOUR SAFETY	POUR VOTRE SÉCURITÉ
Do not store or use gasoline or other flammable vapors and liquids in the vicinity of this or any other appliance.	Ne pas entreposer ni utiliser d'essence ni d'autres vapeurs ou liquides inflammables à proximité de cet appareil ou de tout autre appareil.

We have tried to make this manual as complete as possible and hope you will find it useful. ADC reserves the right to make changes from time to time, without notice or obligation, in prices, specifications, colors, and material, and to change or discontinue models.

Important

For your convenience, log the following information:

DATE OF PURCHASE _____ **MODEL NO.** **AD-236**

RESELLER'S NAME _____

Serial Number(s) _____

_____

_____

Replacement parts can be obtained from your reseller or the ADC factory. When ordering replacement parts from the factory, you can FAX your order to ADC at (508) 678-9447 or telephone your order directly to the ADC Parts Department at (508) 678-9000. Please specify the dryer model number and serial number in addition to the description and part number, so that your order is processed accurately and promptly.

The illustrations on the following pages may not depict your particular dryer exactly. The illustrations are a composite of the various dryer models. Be sure to check the descriptions of the parts thoroughly before ordering.

"IMPORTANT NOTE TO PURCHASER"

Information must be obtained from your local gas supplier on the instructions to be followed if the user smells gas. These instructions must be posted in a prominent location near the dryer.

Table of Contents

Non-Coin Control Door 4

Locking Coin Control Door Assembly 5

Non-Coin Microprocessor Control Panel 6

Coin Microprocessor Control Panel / Box Assemblies 7

Upper Front Panel Assembly (For Cold Rolled Steel Door) 8

Lower Front Panel Assembly (For Cold Rolled Steel Door) 9

Main Door “Steel” Assembly 10

Main Door Switch Assembly (For Cold Rolled Steel Type Door) 11

Tumbler / Support Assembly 12

Lint Drawer Assembly 14

Lint Drawer Switch Assembly 15

Upper Pocket Sensor Bracket Assembly 16

Lower Pocket Sensor Bracket Assembly 18

Idler Bearing Assembly 20

Tumbler Bearing Assembly 21

Motor Mount Assembly 22

Direct Spark Ignition Gas Valve / Burner Assembly 24

Gas Piping Assembly 26

Gas Burner Assembly 27

Sail Switch Assembly 28

Single-Phase (1ø) Motor, Electrical Relay Panel Assembly 29

3-Phase (3ø) Motor, Electrical Relay Panel Assembly 30

Back Guard Assembly 31

Exhaust Ducting Assembly 32

Additional Parts Available 33

Non-Coin Control Door

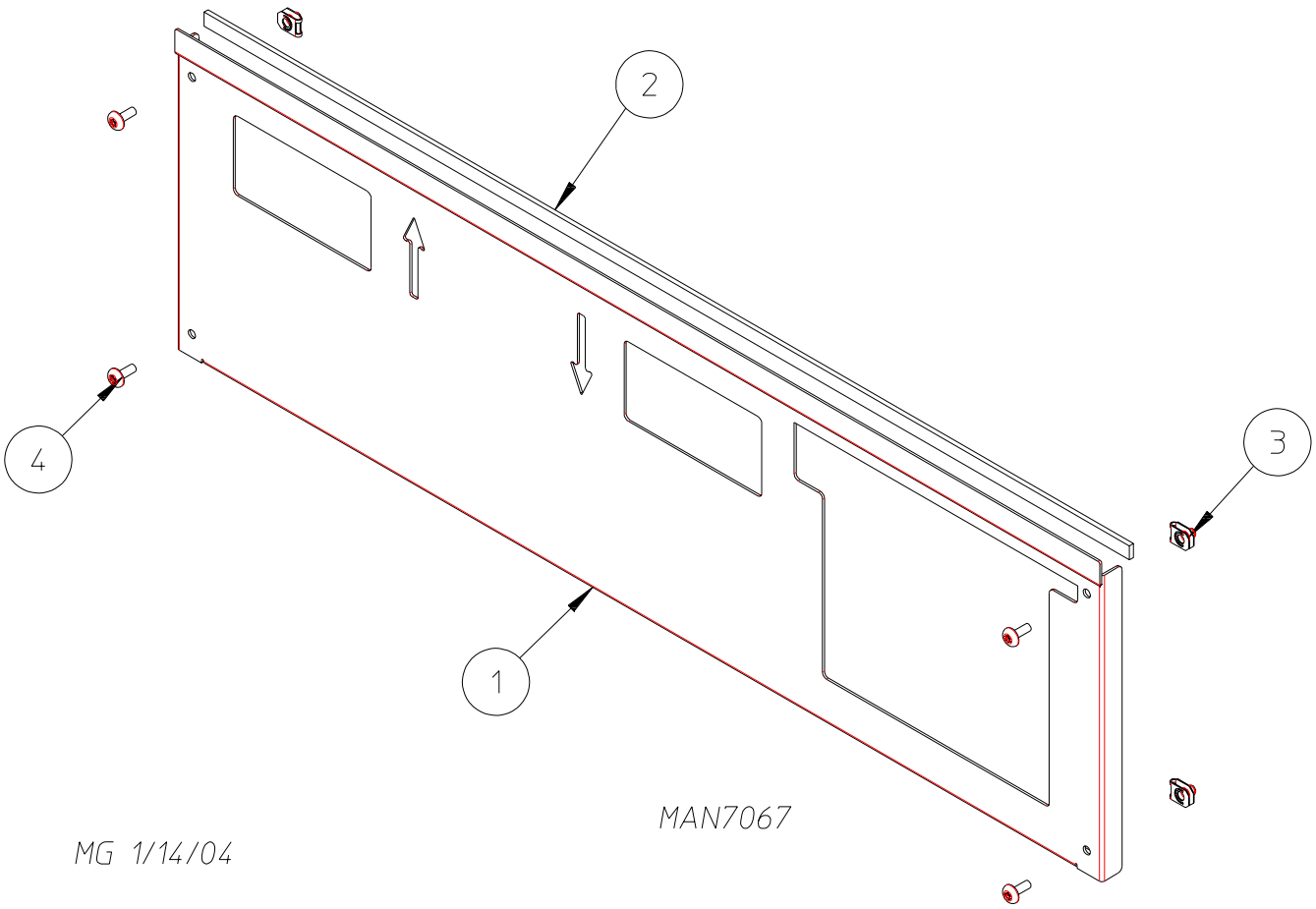

Illus. No.	Part No.	Qty.	Description
1	884135*	1	Non-Coin Control Door Assembly (includes illus. nos. 1 and 2)
	884208	1	Stainless Steel Non-Coin Control Door Assembly (includes illus. nos. 1 and 2)
2	117604	3	1/8” x 3/8” Sponge Tape (sold by the foot)
3	154011	4	#10-32 Multi-Thread U-Nut
4	150314	4	#10-32 x 1/2” TORX® BTN Head Machine Screw

* Specify color when ordering.

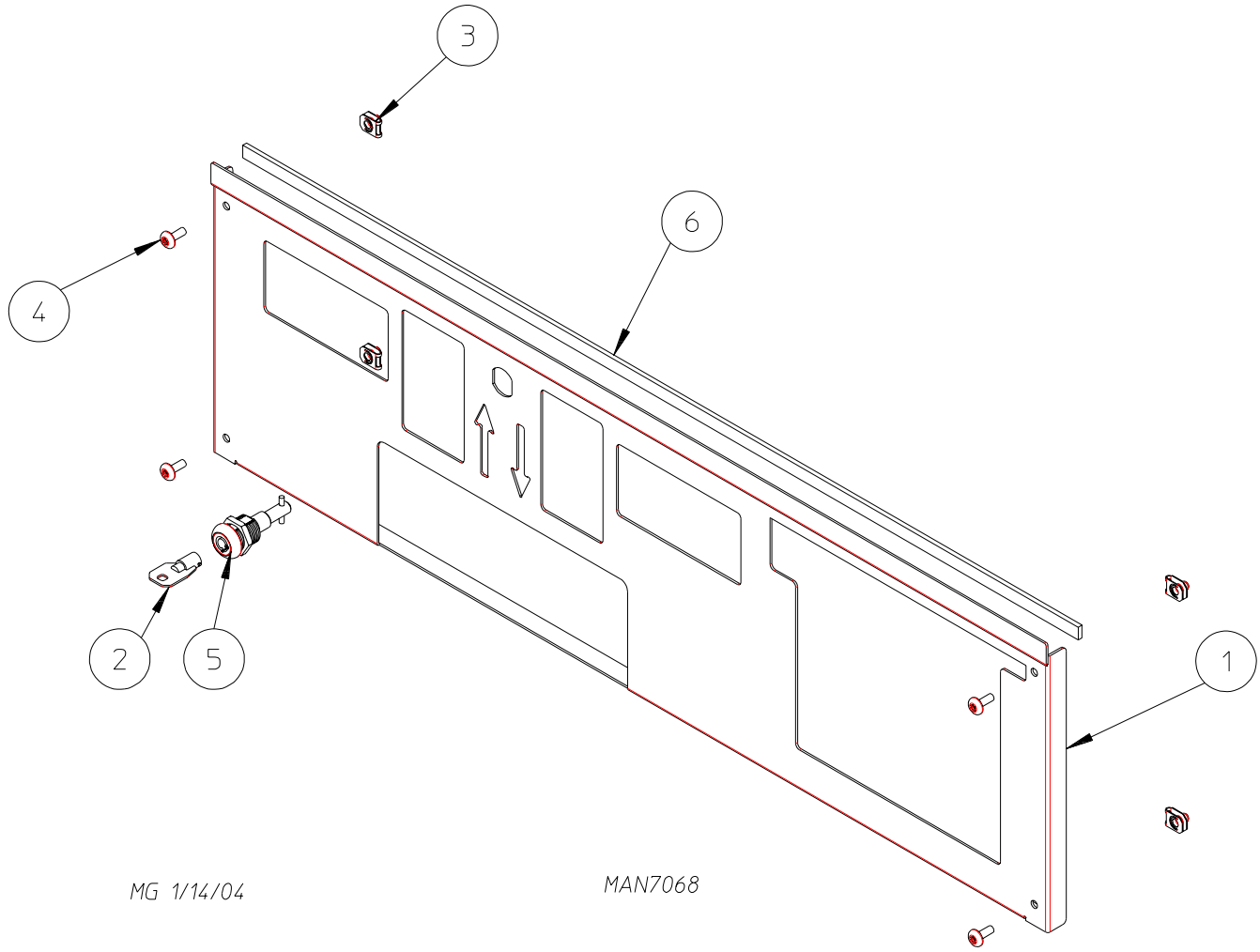

Illus. No.	Part No.	Qty.	Description
1	884136*	1	Coin Control Door Assembly (includes illus. nos. 1 and 6)
	855278	1	Stainless Steel Coin Control Assembly (includes illus. nos. 1 and 6)
2	160140	1	ACE® Key XX4451
3	154011	4	#10-32 Multi-Thread U-Nut
4	150314	4	#10-32 x 1/2" TORX® BTN Head Machine Screw
5	160040	1	Control Door Lock
6	117604	3	1/8" x 3/8" Sponge Tape (sold by the foot)

* Specify color when ordering.

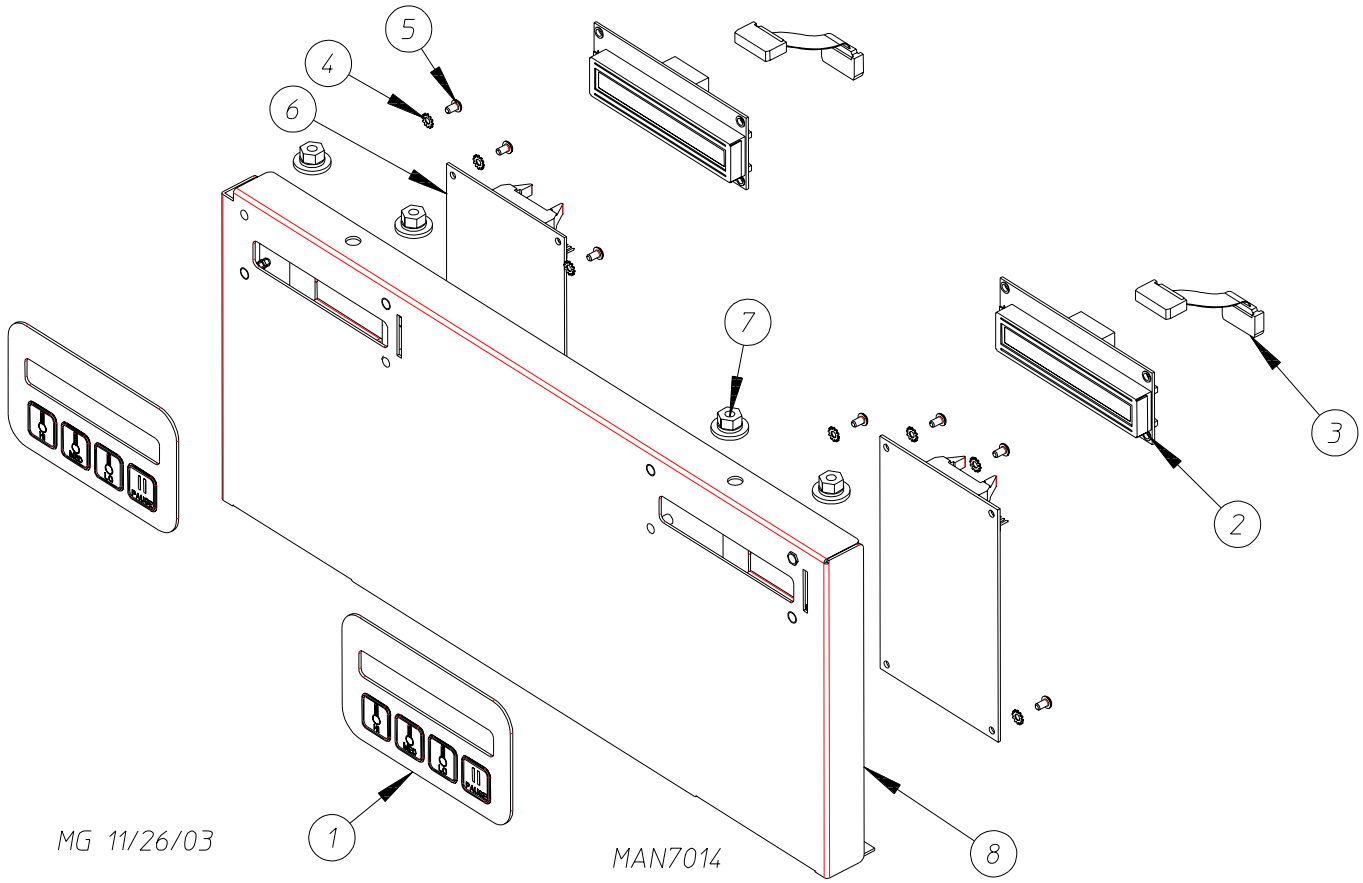

Illus. No.	Part No.	Qty.	Description
1	112575	2	Phase 7 Keypad
2	137270	2	16” x 1” Large Character Display
3	137250	2	Phase 7 Non-Coin Ribbon Cable
4	153010	8	Star Washer
5	150005	8	#6-32 x 1/4” Phillips Round Head Machine Screw
6	887011	2	Phase 7 Non-Coin Computer Board (for models mfd. as of January 26, 2004)
	887007	2	Phase 7 Non-Coin Computer Board (for models mfd. prior to January 26, 2004)
	136016	1	5-amp Fuse for Control Board ... Not Illustrated
7	152014	4	1/4-20 Hex Flange Nut
8	855270	1	Phase 7 Non-Coin Computer Panel

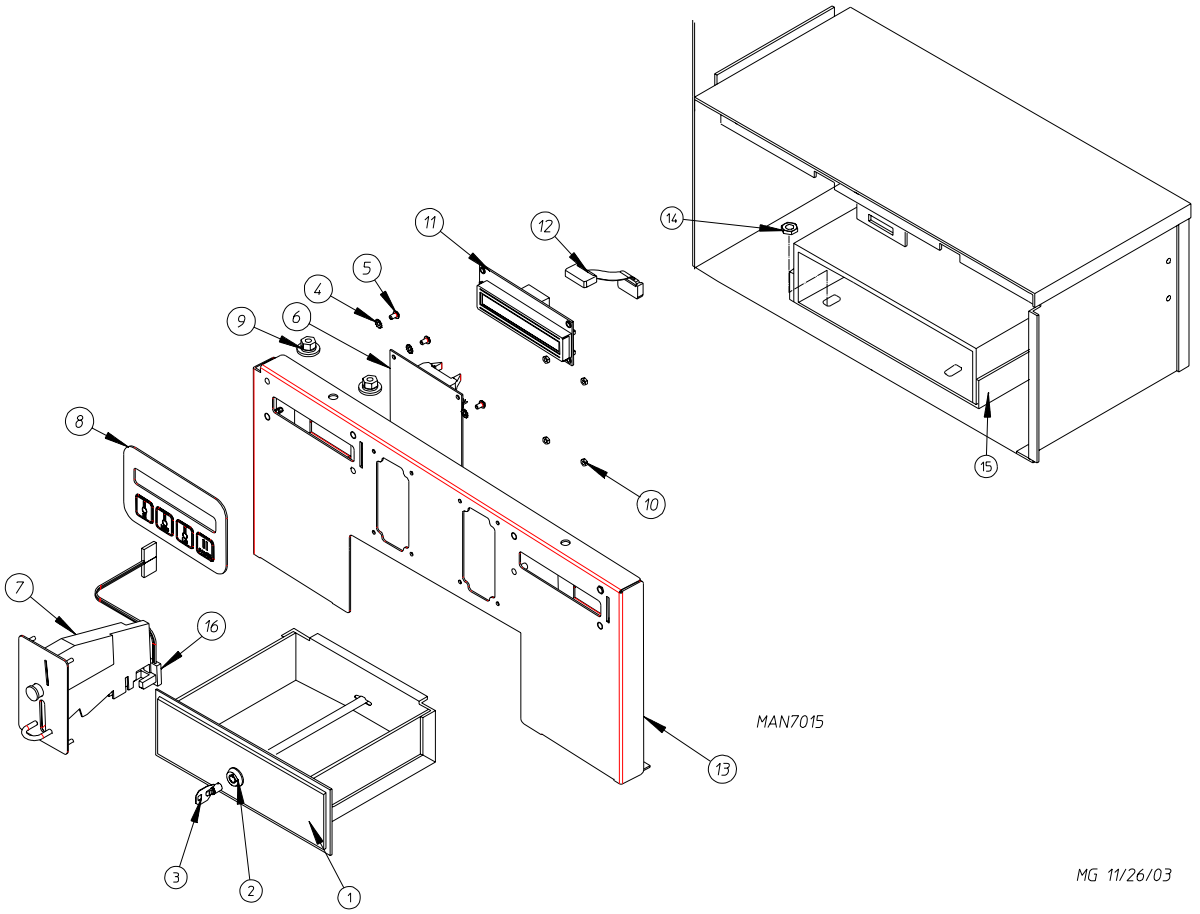

Illus. No.	Part No.	Qty.	Description
1	800536*	1	Coin Box
2	160042	1	Coin Box Lock Assembly with Key
3	160136**	1	Key
4	153010	4	Star Washer
5	150005	4	#6-32 x 1/4” Phillips Round Head Machine Screw
6	887011	1	Phase 7 Coin Board
			(for models mfd. as of January 26, 2004)
	887007	1	Phase 7 Coin Board
			(for models mfd. prior to January 26, 2004)
	136016	1	5-amp Fuse for Control Board … Not Illustrated
7	852317	1	25¢ U.S. Coin Acceptor Assembly
8	112575	1	Phase 7 Keypad
9	152014	4	1/4-20 Hex Flange Nut
10	152102	4	Metric Hex Nut
11	137270	1	16” x 1” Large Character Display
12	137250	1	Phase 7 Coin Ribbon Cable
13	855239	1	Phase 7 Dual Coin Computer Panel
14	152014	4	1/4-20 Hex Flange Nut
15	801316*	1	Coin Vault
16	883774	1	Hanke Phase 7 Optic Switch Assembly

* Specify color when ordering.
** Specify key number when ordering.

NOTE: Duplicate all components for right-hand side of control box.

IMPORTANT: Check label on computer chip to verify correct part number for controller (computer).

Upper Front Panel Assembly (For Cold Rolled Steel Door)

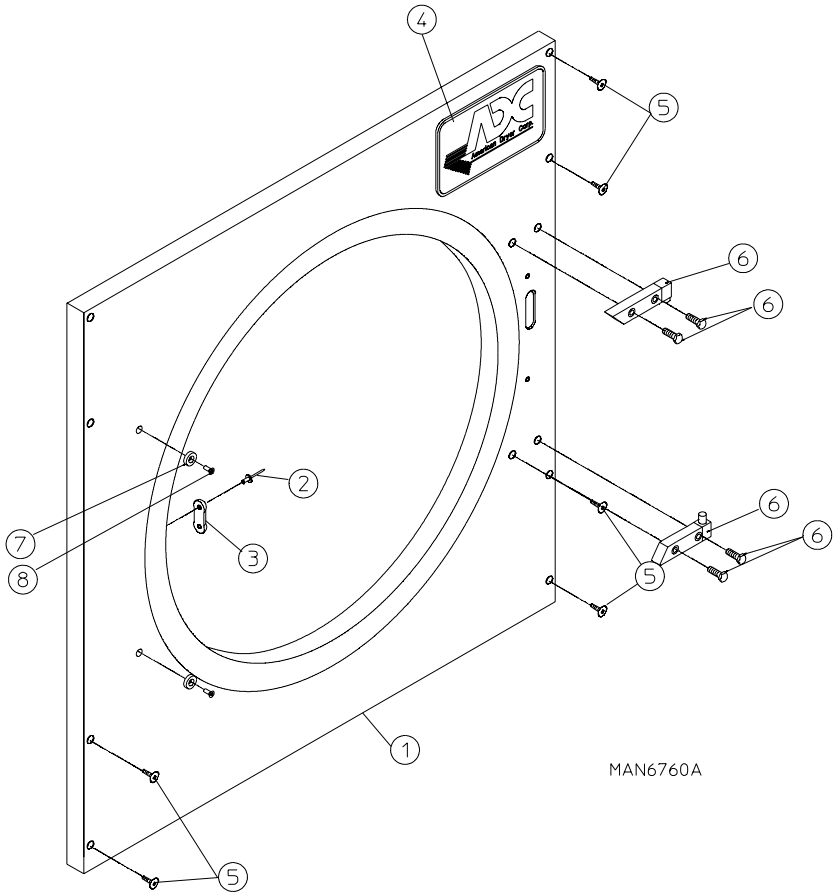

Illus. No.	Part No.	Qty.	Description
1	822857*	1	Right-Hand Upper Front Panel Assembly (for models mfd. as of September 14, 2007) (includes illus. nos. 1, 7, and 8)
	822862	1	Right-Hand Stainless Steel Upper Front Panel Assembly (for models mfd. as of September 14, 2007) (includes illus. nos. 1, 7, and 8)
	800635*	1	Right-Hand Upper Front Panel Assembly (for models mfd. prior to September 14, 2007) (includes illus. nos. 1 through 3)
	850974*	1	Left-Hand Upper Front Panel Assembly (for models mfd. prior to September 14, 2007) (includes illus. nos. 1 through 3)
	884010	1	Right-Hand Stainless Steel Upper Front Panel Assembly (for models mfd. prior to September 14, 2007) (includes illus. nos. 1 through 3)
2	154215	2	1/4” Pop Rivet
3	170330	1	Friction Door Latch
4	112350	1	ADC Logo ONLY
	870011	1	Logo Double Tape Kit
5	150313	8	#10-16 x 1/2” TORX PLUS® Screw
6	————	–	Main Door Hinge (**refer to Main Door “Steel” Assembly on page 10**)
7	102004	2	Door Magnet
8	152223	2	T-20 TORX® Screw

* Specify color when ordering.

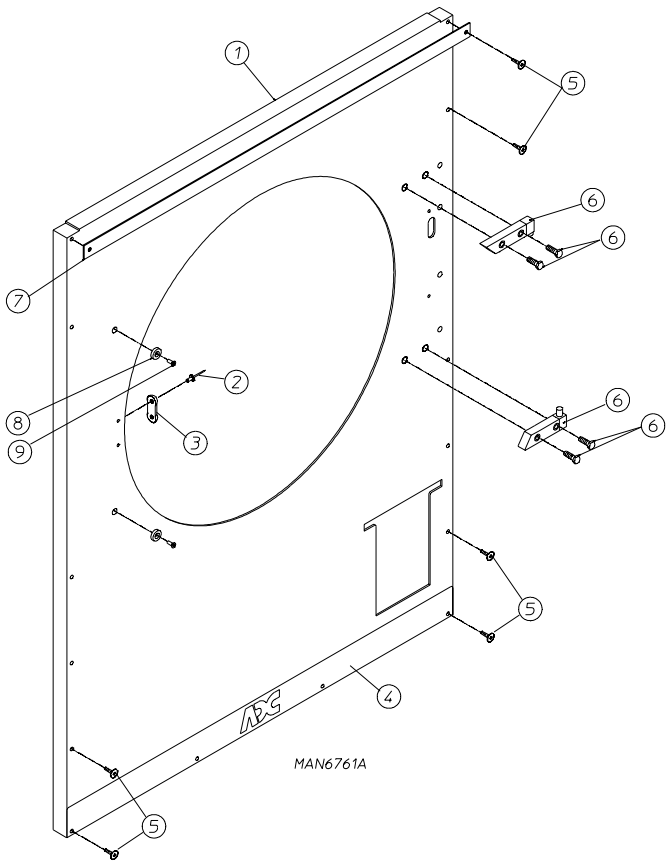

Illus. No.	Part No.	Qty.	Description
1	822859*	1	Right-Hand Lower Front Panel Assembly (for models mfd. as of September 14, 2007) (includes illus. nos. 1, 4, and 7 through 9)
	822861	1	Right-Hand Stainless Steel Lower Front Panel (for models mfd. as of September 14, 2007) (includes illus. nos. 1, 4, and 7 through 9)
	801063*	1	Right-Hand Lower Front Panel Assembly (for models mfd. prior to September 14, 2007) (includes illus. nos. 1 through 4 and 7)
	850972*	1	Left-Hand Lower Front Panel Assembly (for models mfd. prior to September 14, 2007) (includes illus. nos. 1 through 4 and 7)
	884011	1	Right-Hand Stainless Steel Lower Front Panel (for models mfd. prior to September 14, 2007) (includes illus. nos. 1 through 4 and 7)
2	154215	2	1/4” Pop Rivet
3	170330	1	Friction Door Latch
4	315187	1	Kick Plate Trim
5	150320	6	#10-16 x 3/4” TORX PLUS® Screw (black)
	150313	6	#10-16 x 1/2” TORX PLUS® Screw (silver)
6	———	–	Main Door Hinge (**refer to Main Door “Steel” Assembly on page 10**)
7	882602	1	Lower Front Panel Trim
8	102004	2	Door Magnet
9	152223	2	T-20 TORX® Screw

* Specify color when ordering.

Main Door “Steel” Assembly

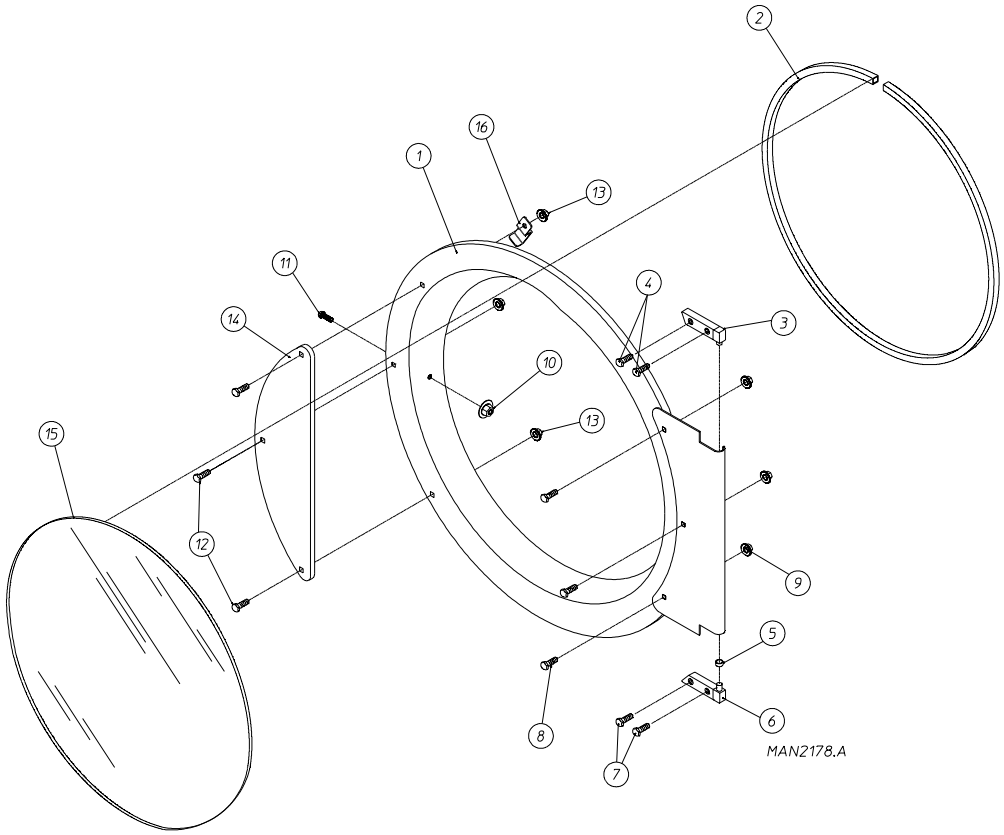

Illus. No.	Part No.	Qty.	Description
1	822661	1	Black Main Door Assembly Complete (for models mfd. as of September 14, 2007) (includes illus. nos. 1, 2, 8, 9, and 12 through 16)
	881150	1	Black Main Door Assembly Complete (for models mfd. prior to September 14, 2007) (includes illus. nos. 1, 2, and 8 through 15)
2	102354	1	Door Gasket
	170731	1	Black Gasket Adhesive (10.3 oz. cartridge)
3	881152	1	Black Top Hinge Block Assembly (includes illus. nos. 3 and 4)
4	150445	2	1/4-20 x 3/4” Black Cap Head Screw
5	153031	1	1/4” Nylon Washer
6	881151	1	Black Bottom Hinge Block Assembly (includes illus. nos. 5 through 7)
7	150445	2	1/4-20 x 3/4” Black Cap Head Screw
8	150683	3	1/4-20 x 5/8” Black Carriage Bolt
9	152014	3	1/4-20 Free Spin Wash Nut
10	151010	1	#10-32 Black Hex Acorn Nut (for models mfd. prior to September 14, 2007)
11	150125	1	Door Latch Screw (for models mfd. prior to September 14, 2007)
12	150683	3	1/4-20 x 5/8” Black Carriage Bolt
13	152014	3	1/4-20 Free Spin Wash Nut
14	881210	1	Black Main Door Handle
15	102211	1	20-7/16” Door Glass
	170731	1	Black Glass Adhesive (10.3 oz. cartridge)
16	319298	2	Magnet Bracket (for models mfd. as of September 14, 2007)

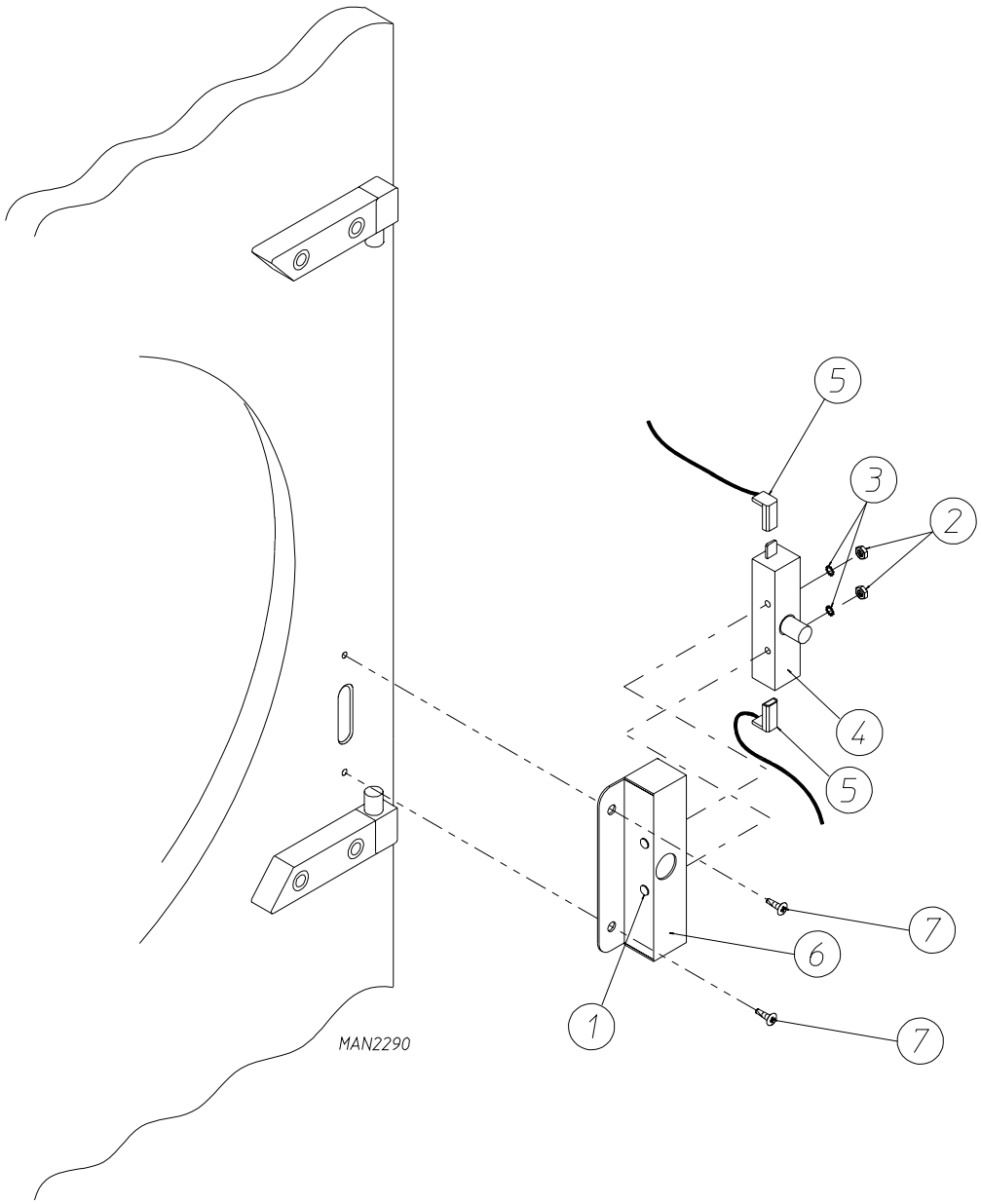

Illus. No.	Part No.	Qty.	Description
1	150006	2	#6-32 x 7/8” Phillips Pan Head Machine Screw
2	152013	2	#6-32 Hex Nut
3	153010	2	Star Washer
4	137005	1	Door Switch
5	122636	2	Flag Terminal
6	881211	1	Black Main Door Switch Housing (includes illus. nos. 1 through 3 and 6)
	881153	1	Black Main Door Switch Housing Complete (includes illus. nos. 1 through 4 and 6)
7	150301	2	#8-18 x 7/16” Phillips Pan Head TEK Screw

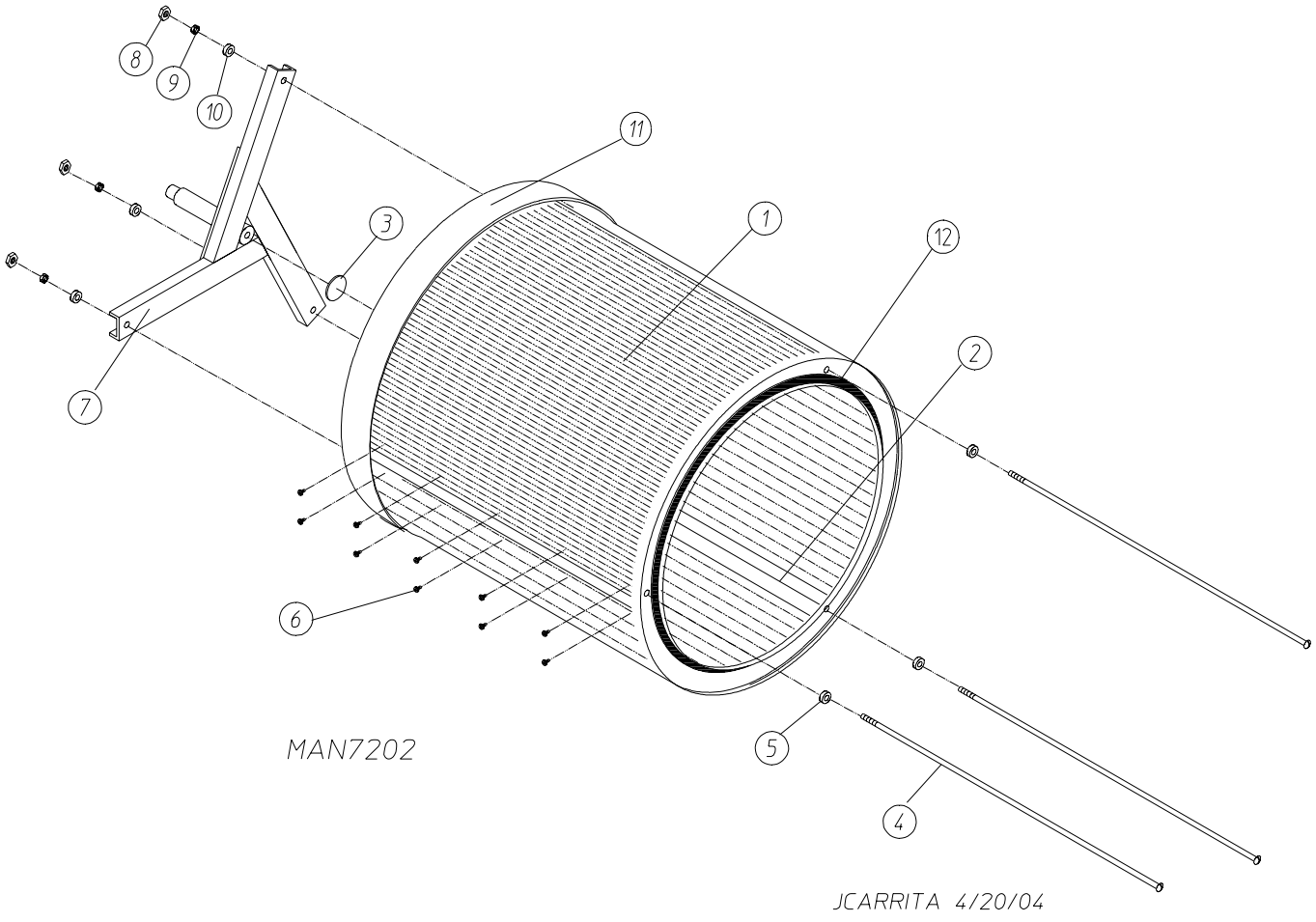
8
9
10
11
3
1
12
2
7
6
5
4
MAN7202
JCARRITA 4/20/04

Illus. No.	Part No.	Qty.	Description
1	800831	1	Galvanized Tumbler and Support Assembly Complete (includes illus. nos. 1 through 12)
	800721	1	Galvanized Tumbler (includes illus. nos. 1, 2, 6, 11, and 12)
	800891	1	Stainless Steel Tumbler and Support Assembly Complete (includes illus. nos. 1 through 11)
	800841	1	Stainless Steel Tumbler (includes illus. nos. 1, 2, and 6)
2	301315	2	Short Tumbler Rib
	301316	1	Tall Tumbler Rib
	301414	2	Stainless Steel Short Tumbler Rib
	301415	1	Stainless Steel Tall Tumbler Rib
3	115986	1	Felt Tumbler Pad
4	100915	3	3/8-16 x 31” Tie Rod
5	153004	3	3/8” Flat Washer
6	154210	30	5/32” x 3/16” Pop Rivet
7	800617	1	Tumbler Support
8	152027	3	3/8-16 Hex Nut
9	153005	3	3/8” Lock Washer
10	153004	3	3/8” Flat Washer
11	116003	1	Felt Collar
12	115992	1	Felt Collar
	401010	1	#847 Adhesive for Felt Collar (5 oz. tube) ... Not Illustrated

Lint Drawer Assembly

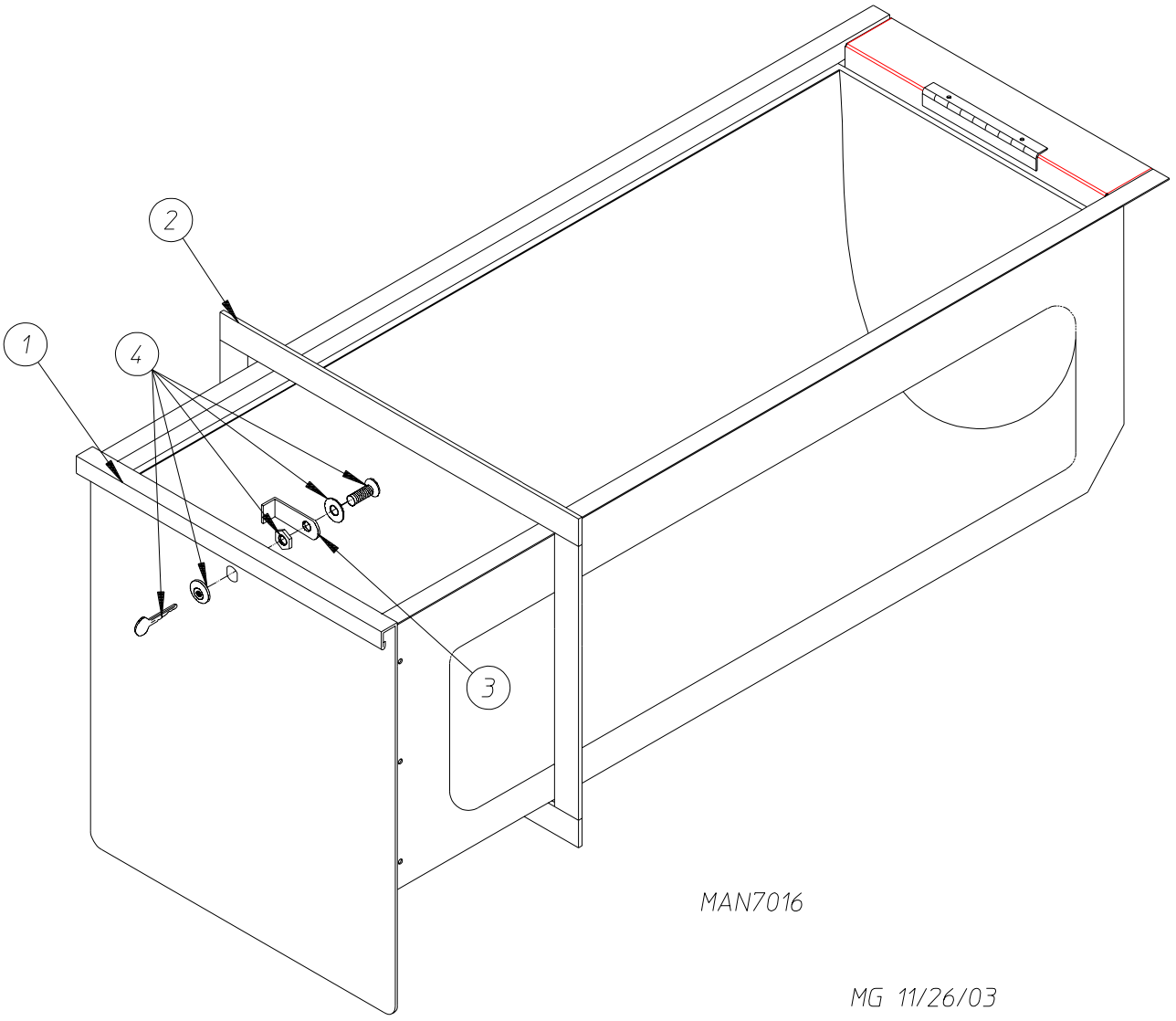

Illus. No.	Part No.	Qty.	Description
1	884209*	1	Lint Drawer Assembly (includes illus. nos. 1 and 2)
2	117605	3	1/4” x 3/8” Neoprene Sponge Tape
3	160031	1	Lint Drawer Cam
4	160015	1	Lint Drawer Lock Assembly

* Specify color when ordering.

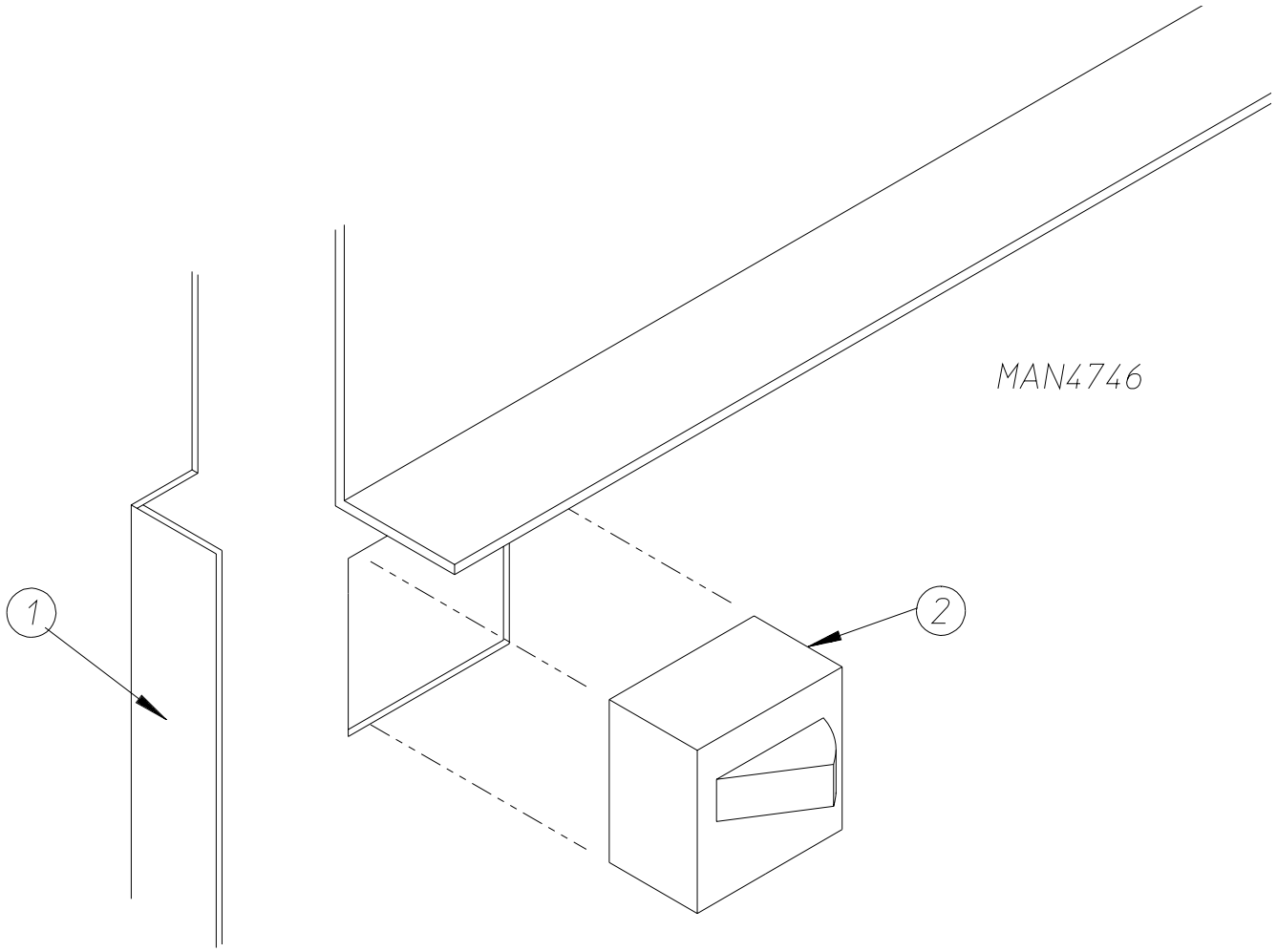

Illus. No.	Part No.	Qty.	Description
1	800972	1	Lint Drawer Switch Box (for bottom pocket Only)
2	122002	1	Lint Drawer Switch

Upper Pocket Sensor Bracket Assembly

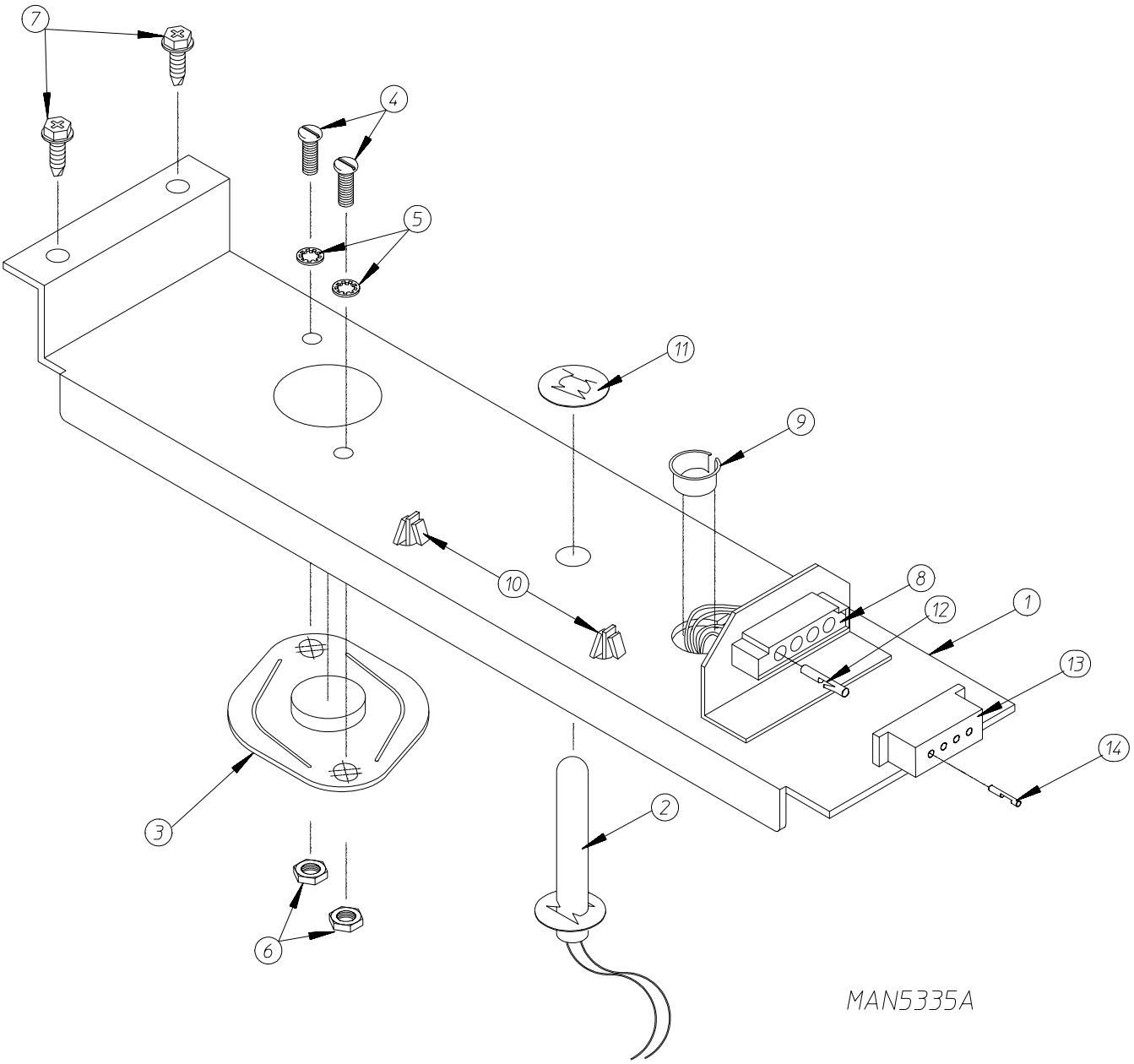

Illus. No.	Part No.	Qty.	Description
1	800769	1	Temperature Sensor Bracket ONLY
	851658	1	Temperature Sensor Bracket Complete (for models mfd. as of December 11, 2008) (includes illus. nos. 1 through 12)
	855260	1	Temperature Sensor Bracket Complete (for models mfd. prior to December 11, 2008) (includes illus. nos. 1 through 12)
2	851654	1	Temperature Sensor Probe (for models mfd. as of December 11, 2008) (includes illus. nos. 2, 8, 10, 11, and 12)
	882931	1	Temperature Sensor Probe (for models mfd. prior to December 11, 2008) (includes illus. nos. 2, 8, 10, 11, and 12)
3	130112	1	225° Thermostat
4	150005	2	#6-32 x 1/4” Round Head Machine Screw
5	153010	2	Star Washer
6	152000	2	#6-32 Hex Nut
7	150301	2	#8-18 x 7/16” Phillips Pan Head Screw
8	122649	1	4-Pin Connector (female) (for models mfd. as of December 11, 2008)
	122605	1	4-Pin Connector (female) (for models mfd. prior to December 11, 2008)
9	121300	1	Open / Closed Bushing
10	121494	3	3/16” Push Mount Wire Tie
11	154007	2	1/4” Push-On Fastener
12	122643	4	Pin Terminal (for models mfd. as of December 11, 2008)
	122701	4	Socket Terminal (for models mfd. prior to December 11, 2008)
13	122648	1	4-Pin Connector (for models mfd. as of December 11, 2008)
	122604	1	4-Pin Connector (for models mfd. prior to December 11, 2008)
14	122706	4	Socket Terminal (for models mfd. as of December 11, 2008)
	122700	4	Pin Terminal (for models mfd. prior to December 11, 2008)
	122672	1	Pin / Socket Extraction Tool … Not Illustrated (for models mfd. as of December 11, 2008)
	122801	1	Pin / Socket Extraction Tool … Not Illustrated (for models mfd. as of December 11, 2008)

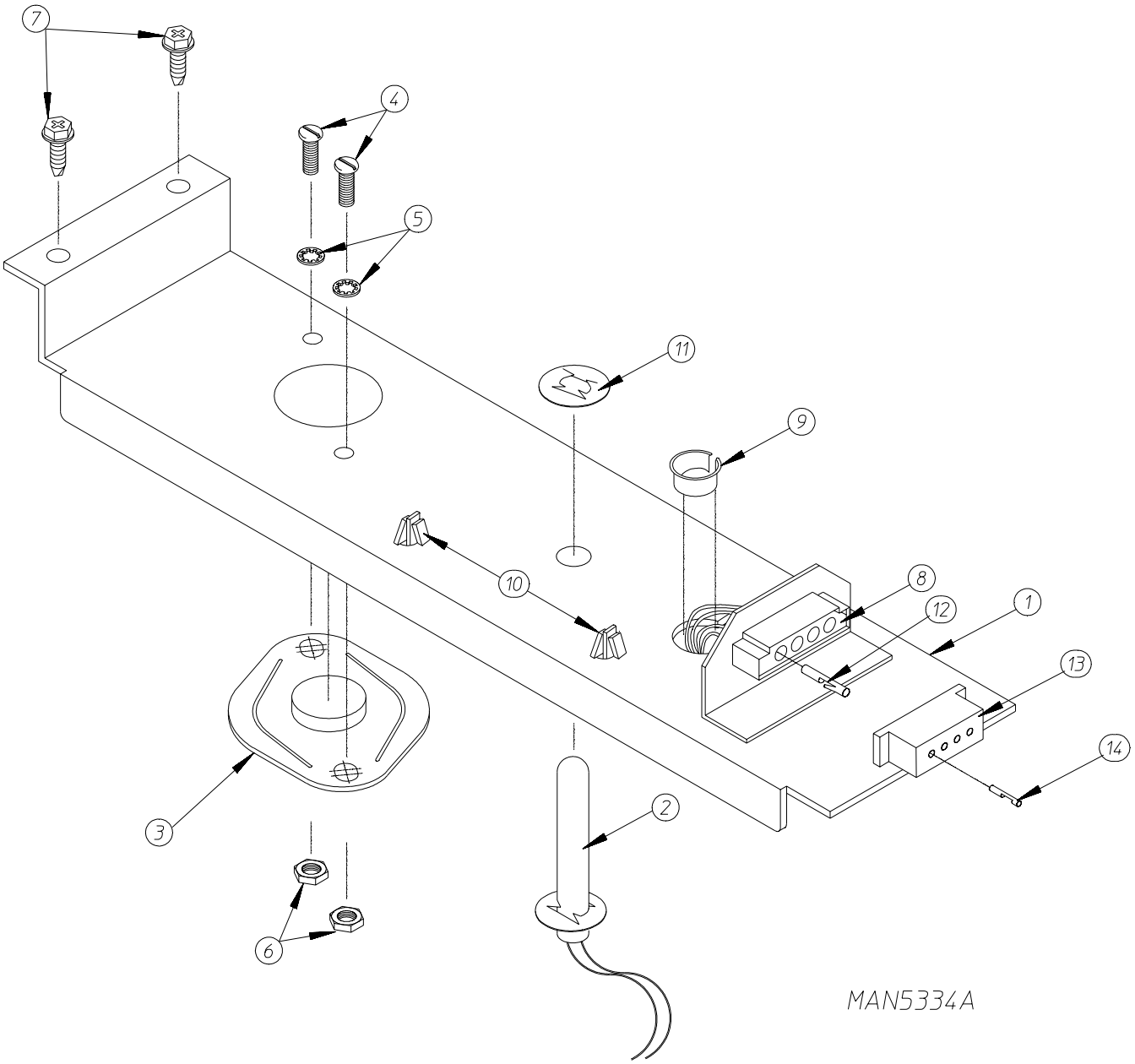
7
4
5
11
9
10
8
12
1
13
14
3
2
6
MAN5334A

Illus. No.	Part No.	Qty.	Description
1	800770	1	Temperature Sensor Bracket ONLY
	851657	1	Temperature Sensor Bracket Complete (for models mfd. as of December 11, 2008) (includes illus. nos. 1 through 12)
	855261	1	Temperature Sensor Bracket Complete (for models mfd. prior to December 12, 2008) (includes illus. nos. 1 through 11)
2	851654	1	Temperature Sensor Probe (for models mfd. as of December 11, 2008) (includes illus. nos. 2, 8, 10, 11, and 12)
	882931	1	Temperature Sensor Probe (for models mfd. prior to December 11, 2008) (includes illus. nos. 2, 8, 10, 11, and 12)
3	130112	1	225° Thermostat
4	150005	2	#6-32 x 1/4” Round Head Machine Screw
5	153010	2	Star Washer
6	152000	2	#6-32 Hex Nut
7	150301	2	#8-18 x 7/16” Phillips Pan Head Screw
8	122649	1	4-Pin Connector (for models mfd. as of December 11, 2008)
	122605	1	4-Pin Connector (female) (for models mfd. prior to December 11, 2008)
9	121300	1	Open / Closed Bushing
10	121494	3	3/16” Push Mount Wire Tie
11	154007	2	1/4” Push-On Fastener
12	122643	4	Pin Terminal (for models mfd. as of December 11, 2008)
	122701	4	Socket Terminal (for model mfd. prior to December 11, 2008)
13	122648	1	4-Pin Connector (for models as of December 11, 2008)
	122604	1	4-Pin Connector (male) (for models prior to December 11, 2008)
14	122706	4	Socket Terminal (for models mfd. as of December 11, 2008)
	122700	4	Pin Terminal (for models mfd. prior to December 11, 2008)
	122672	1	Pin / Socket Extraction Tool … Not Illustrated (for models mfd. as of December 11, 2008)
	122801	1	Pin / Socket Extraction Tool … Not Illustrated (for models mfd. prior to December 11, 2008)

Idler Bearing Assembly

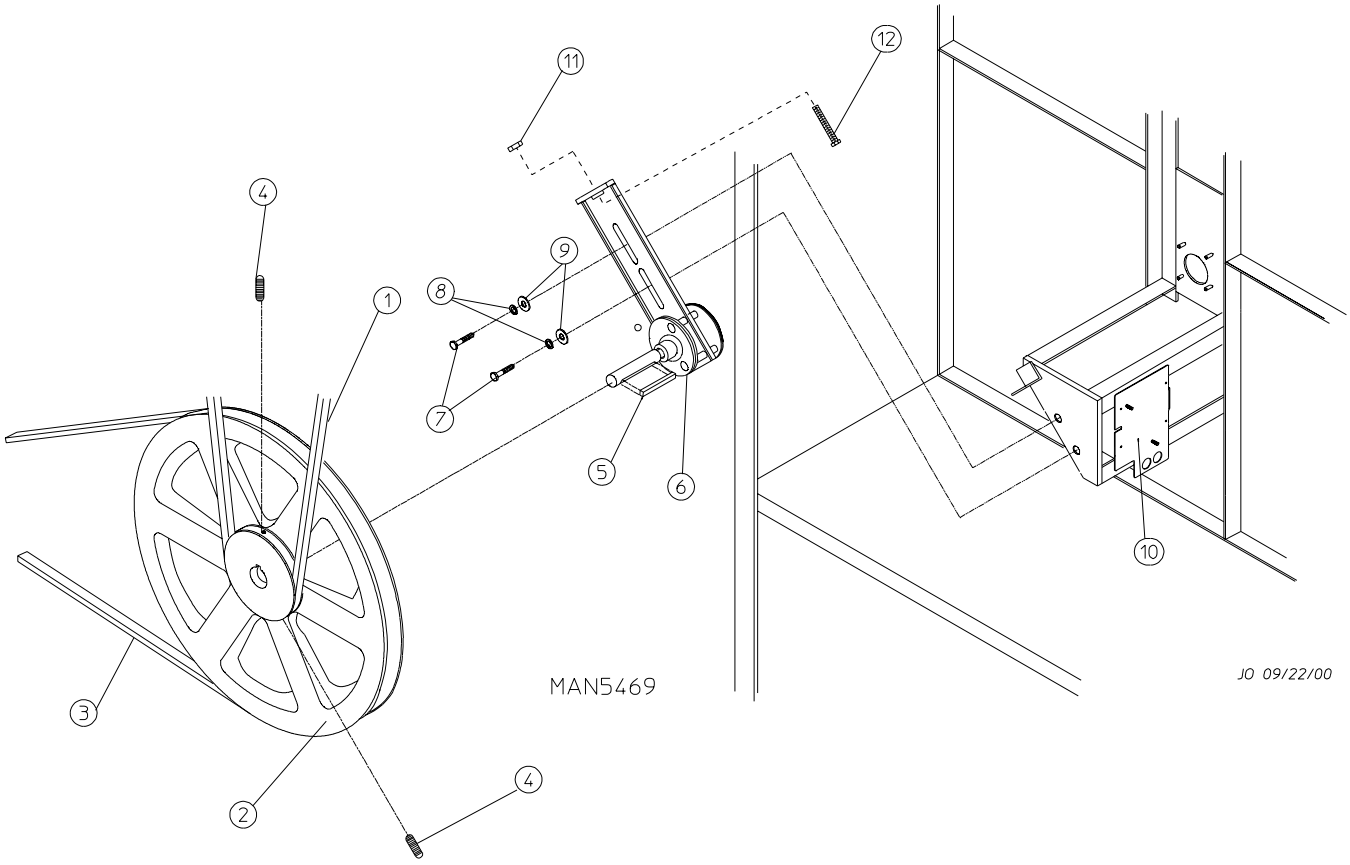

Illus. No.	Part No.	Qty.	Description
1	100111	1	5L-650 V-Belt (to tumbler pulley)
2	101129	1	9” x 2-1/2” Pulley
3	100113	1	4L-400 V-Belt (to motor pulley) for 60 Hz Models ONLY
	100115	1	4L-410 V-Belt (to motor pulley) for 50 Hz Models ONLY
4	154301	2	5/16-18 x 1” Allen Setscrew
5	100705	1	3/16” x 3/16” x 1-3/8” Key
6	882777	1	Idler Bearing Assembly Complete
			(includes illus. nos. 5 through 9, 11, and 12)
7	150617	2	3/8-16 x 1” Hex Head Machine Bolt
8	153005	2	3/8” Lock Washer
9	153004	2	3/8” Flat Washer
10	———	–	Direct Spark Ignition Module Mounting Bracket
			(**refer to Direct Spark Ignition Gas Valve / Burner Assembly on page 24**)
11	152004	1	5/16-18 Hex Nut
12	150509	1	5/16-18 x 3” Hex Head Machine Bolt

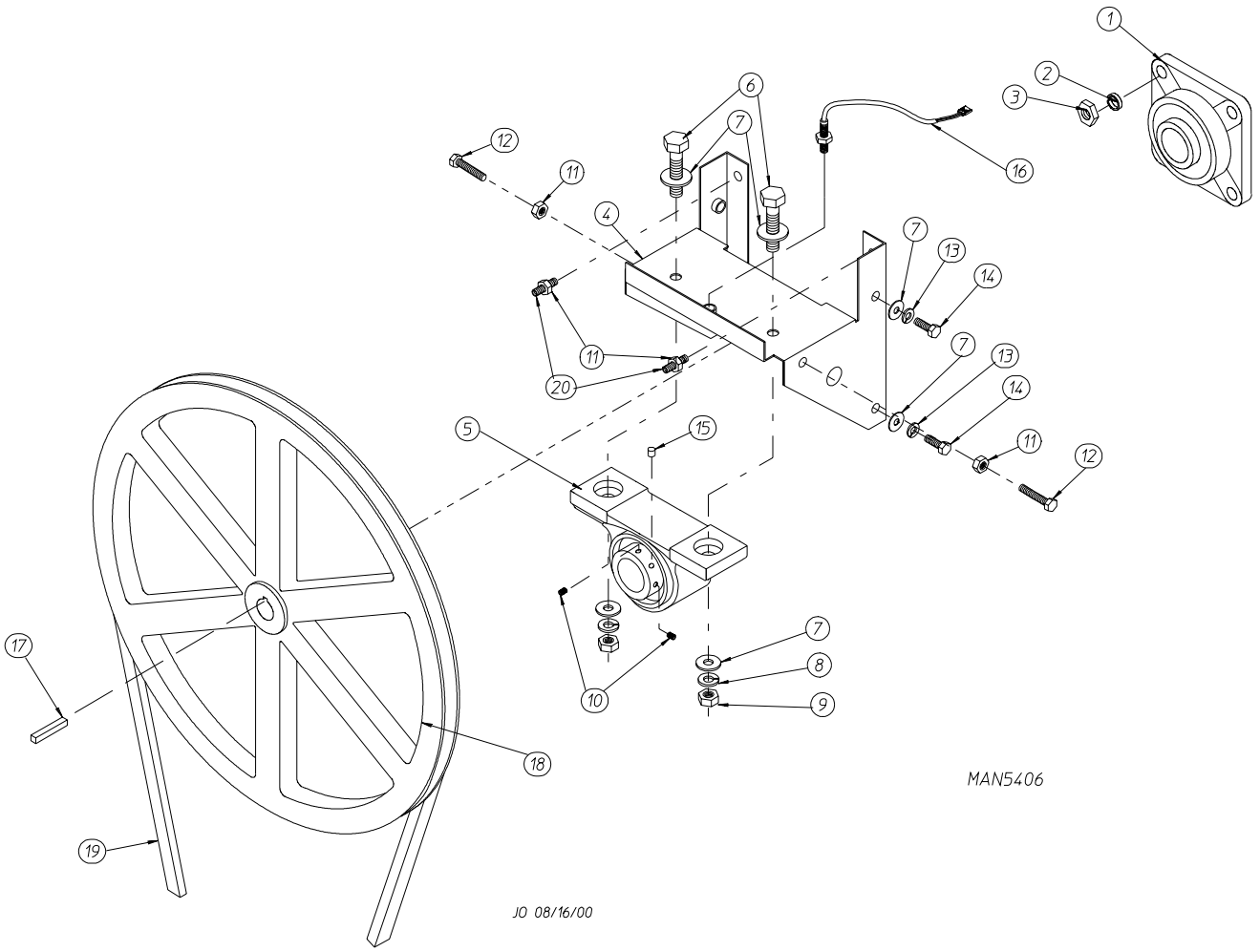

Illus. No.	Part No.	Qty.	Description
1	880203	1	1-3/8” Flange Bearing
2	153005	4	3/8” Lock Washer
3	152005	4	3/8-16 Hex Nut
4	800981	1	Pillow Block Bearing Assembly Complete (includes illus. nos. 4 through 15 and 20)
	800980	1	Pillow Block Bearing Support ONLY
5	880779	1	1-3/8” Pillow Block Bearing (includes illus. nos. 5, 10, and 15)
6	150601	2	3/8-16 x 2” Hex Bolt
7	153004	8	3/8” Flat Washer
8	153005	2	3/8” Lock Washer
9	152005	2	3/8-16 Hex Nut
10	154321	2	5/16-24 x 3/8” Black Setscrew
11	152004	4	5/16-18 Hex Nut
12	150621	2	5/16-18 x 1-1/2” Tap Bolt
13	153002	4	5/16” Lock Washer
14	150501	4	5/16-18 x 3/4” Tap Bolt
15	102120	1	Sintered 8 Magnet
16	822735	1	Rotational Sensor Assembly
17	100713	1	1/4” x 1/4” x 7/8” Key
18	884042	1	18” Pulley
19	100111	1	5L-650 V-Belt (to idler assembly)
20	150610	2	5/16-18 x 1-1/2” Allen Setscrew

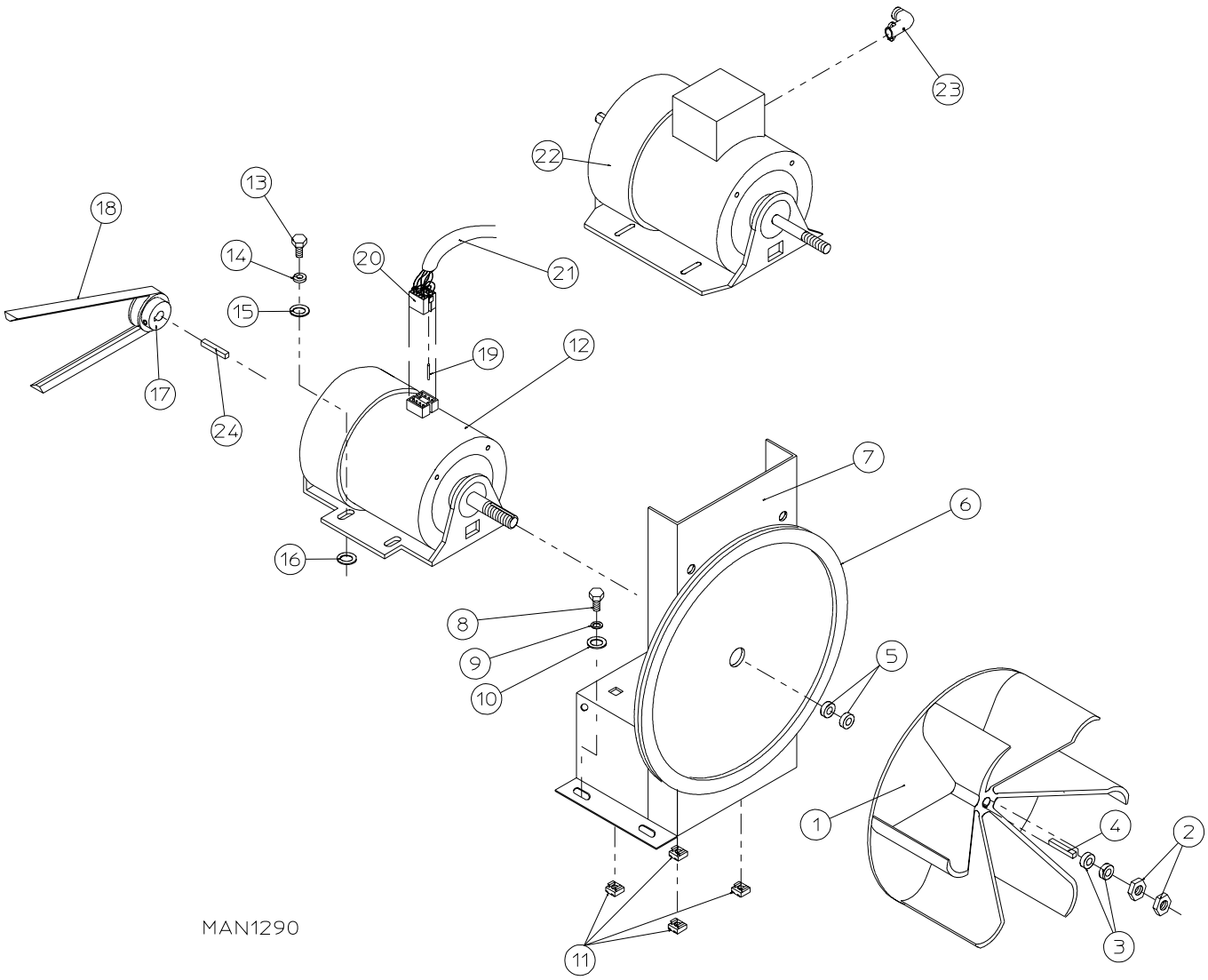
23
22
13
18
14
20
21
15
19
12
17
24
7
6
16
8
9
10
5
1
4
2
3
11
MAN1290

Illus. No.	Part No.	Qty.	Description
1	100604	1	12-1/2” Impellor with 1/2” Bore
2	152006	2	1/2-20 Left-Hand Jam Nut
3	153050	*	1/2” S.A.E. Flat Washer
4	100723	1	1/8” x 1/8” x 1-3/8” Key
5	153050	*	1/2” S.A.E. Flat Washer
6	117604	4	1/8” x 3/8” Sponge Tape (sold by the foot)
7	800965	1	Motor Mount ONLY
	803967	1	1/2 hp 115-230v 1ø 60 Hz Motor Mount Assembly Complete with Plug Motor (includes illus. nos. 1 through 7 and 11 through 17)
	822526	1	1/2 hp 240v 1ø 50 Hz Motor Mount Assembly Complete with Plug Motor (includes illus. nos. 1 through 7 and 11 through 17)
	803968**	1	1/2 hp 208/230/380/460v 3ø 60 Hz Motor Mount Assembly Complete (includes illus. nos. 1 through 7, 11, 13 through 17, 22, and 23)
	803902**	1	1/2 hp 208/230/380/460v 3ø 50 Hz Motor Mount Assembly Complete (includes illus. nos. 1 through 7, 11, 13 through 17, 22, and 23)
8	150501	4	5/16-18 x 3/4” Hex Head Machine Bolt
9	153002	4	5/16” Lock Washer
10	153001	4	5/16” Flat Washer
11	154000	4	5/16-18 Tinnerman Nut
12	181049	1	1/2 hp 100-230v 1ø 50/60 Motor with Plug
13	150501	4	5/16-18 x 3/4” Hex Head Machine Bolt
14	153002	4	5/16” Lock Washer
15	153001	4	5/16” Flat Washer
16	153001	*	5/16” Flat Washer
17	101131	1	1/2” x 2-1/4” Motor Pulley (for use on 1ø, 60 Hz models Only)
	101133	1	5/8” x 2-1/4” Motor Pulley (for use on 3ø, 60 Hz models Only)
	101125	1	1/2” x 2-1/2” Motor Pulley (for use on 1ø, 50 Hz models Only)
	101130	1	5/8” x 2-1/2” Motor Pulley (for use on 3ø, 50 Hz models Only)
18	100113	1	4L-400 V-Belt (to idler) for 60 Hz Models ONLY
	100115	1	4L-410 V-Belt (to idler) for 50 Hz Models ONLY
19	122701	8	Socket Terminal
20	137030	1	8-Pin Housing
	122801	1	Pin / Socket Extraction Tool … Not Illustrated
21	826316	1	120v 1ø Motor Harness with Plug
	826317	1	230v 1ø Motor Harness with Plug
22	100007**	1	1/2 hp 208/230/380/460v 3ø 50/60 Hz Motor
23	120200	1	3/8” x 90° Connector
24	100723	1	1/8” x 1/8” x 1-3/8” Key (for use on 1ø models Only)
	100701	1	3/16” x 3/16” x 1” Key (for use on 3ø models Only)

* As required.
** Specify voltage when ordering.

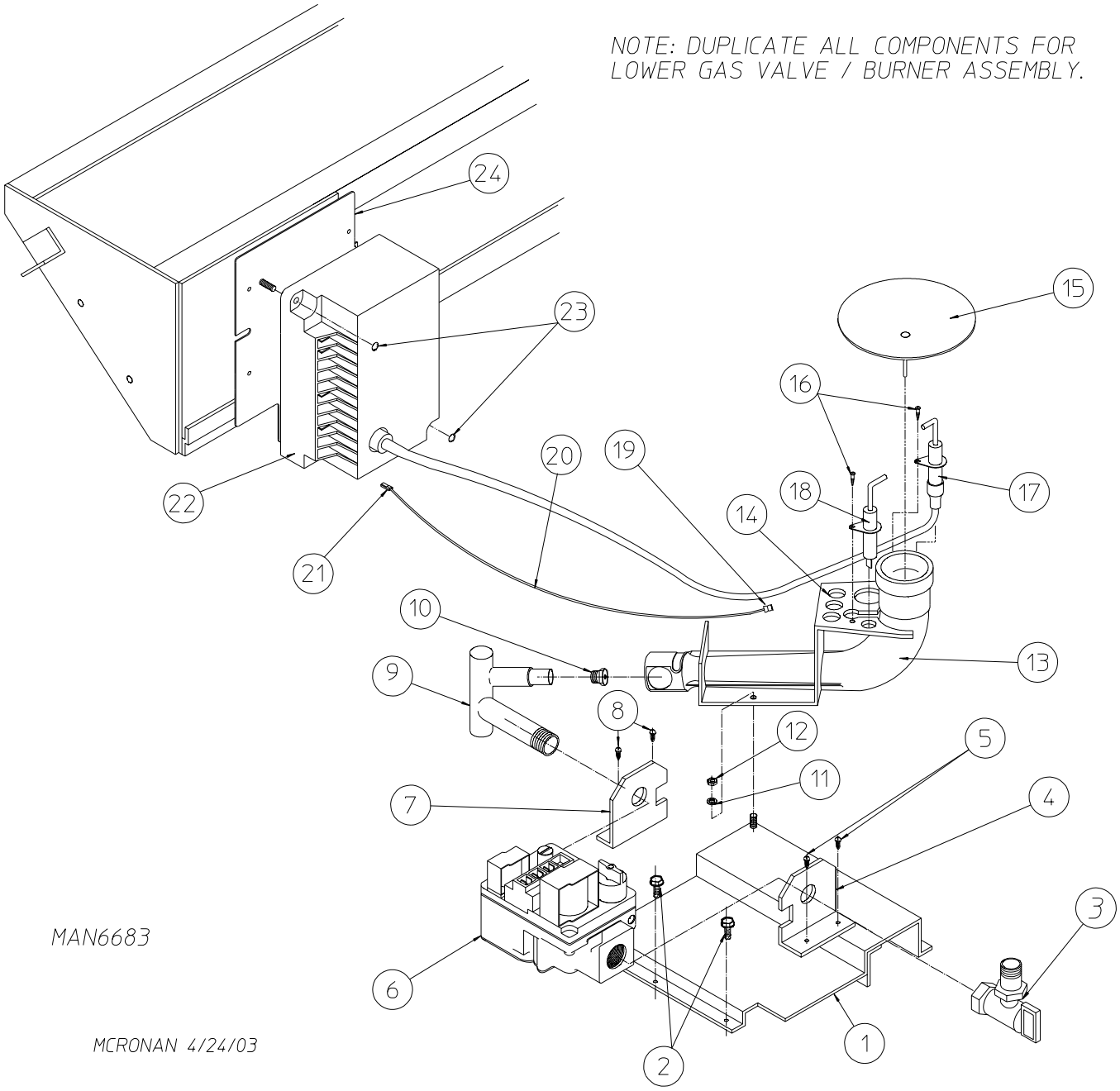
NOTE: DUPLICATE ALL COMPONENTS FOR
LOWER GAS VALVE / BURNER ASSEMBLY.
24
23
22
20
19
21
15
16
18
17
14
10
13
9
8
12
5
11
7
4
3
6
1
2
MAN6683
MCRONAN 4/24/03

Illus. No.	Part No.	Qty.	Description
1	824142	1	Gas Valve / Burner Tube Mounting Plate ONLY
	809313*	1	Natural Gas – Gas Valve / Burner Assembly Complete Less Orifice (includes illus. nos. 1 and 3 through 18)
	809314*	1	Liquid Propane Gas Valve / Burner Assembly Complete Less Orifice (includes illus. nos. 1 and 3 through 18)
	882396**	1	Liquid Propane Conversion Kit with Orifice
2	150300	2	#10-16 x 1/2” Hex Washer TEK Screw
3	141317	1	1/2” Union Elbow
4	318650	1	Notched Pipe Bracket
5	150301	2	#8-18 x 7/16” Phillips Pan Head TEK Screw
6	887274	1	1/2” 24 VAC (natural gas) Gas Valve
	887273	1	1/2” 24 VAC (liquid propane) Gas Valve
7	318650	1	Notched Pipe Bracket
8	150301	2	#8-18 x 7/16” Phillips Pan Head TEK Screw
9	141235	1	1/2” Single Port Manifold
10	140829	1	#18 Burner Orifice (natural gas Only)
	140814	1	#38 Burner Orifice (liquid propane gas Only)
11	153012	1	#8 Internal Star Washer
12	152001	1	#8-32 x 3/8” Hex Nut
13	141131	1	Up-Shot Burner Tube (includes illus. no. 15)
14	318009	1	Burner Tube Bracket
15	———***	1	Flame Spreader
16	150315	2	#6 x 3/8” Phillips Pan Head Machine Screw
17	829998	1	Spark Electrode with High Voltage Wire (for models with 1/4” spade connector at module)
	128917	1	Spark Electrode with High Voltage Wire (for models with spike style connector at module)
18	128918	1	Flame Sensor Probe
19	121028	1	1/4” Insulated Terminal
20	132607	2	#18 Gauge Red Silicone Wire
21	121028	1	1/4” Insulated Terminal
22	884284	1	Direct Spark Ignition Module with High Voltage Wire
23	152013	2	#6-32 Hex Nut
24	824131	1	Direct Spark Ignition Module Mounting Bracket

* Burner orifice is not included and must be ordered separately.
** Consult factory for elevations over 2,000 feet.
*** Not sold separately.

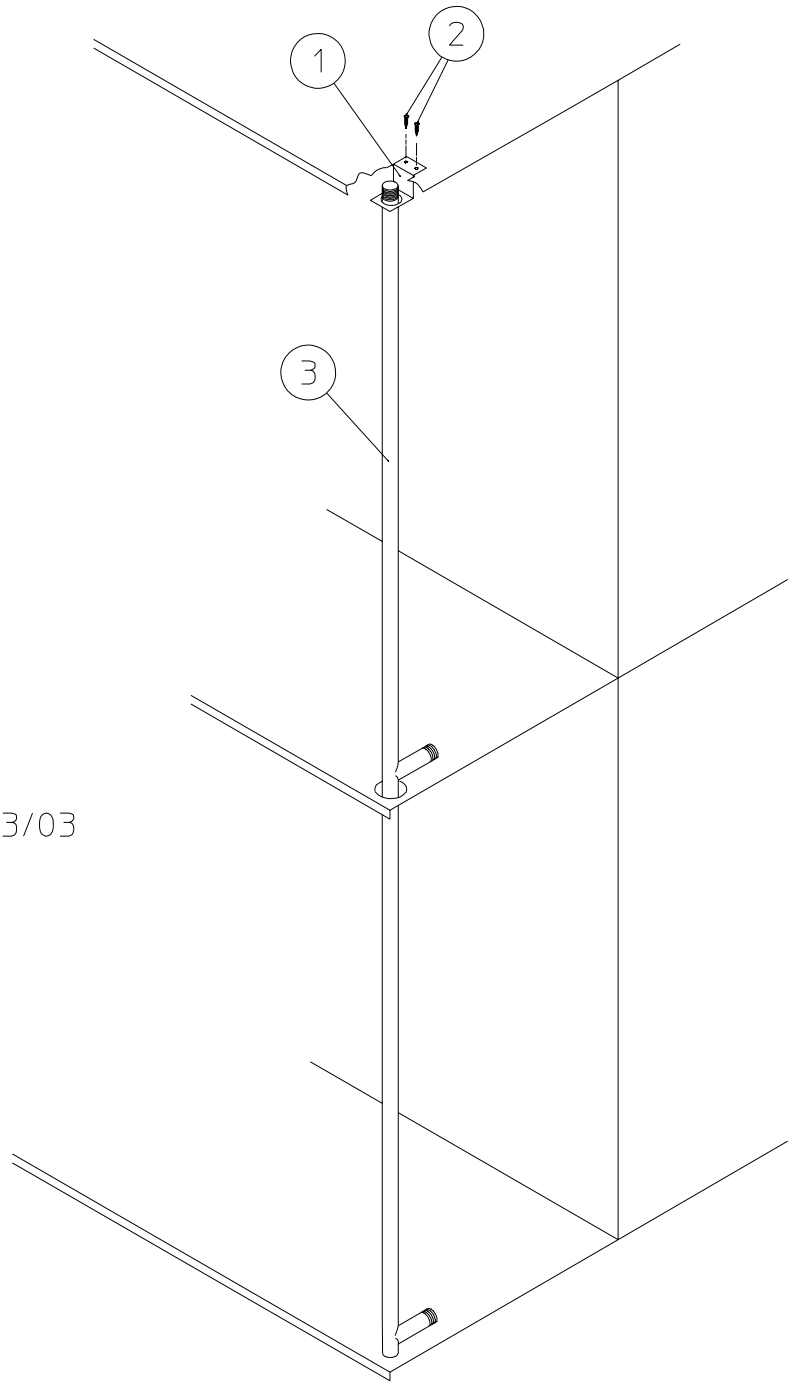

MAN6922
JCARRITA 9/23/03

Illus. No.	Part No.	Qty.	Description
1	318702	1	Top Pipe Support Bracket ONLY
2	150300	2	#10-16 x 1/2” Hex Washer TEK Screw
3	141236	1	Gas Piping Manifold

UPPER BURNER CHAMBER ASSY

NOTE: DUPLICATE ALL COMPONENTS FOR LOWER BURNER CHAMBER ASSY.

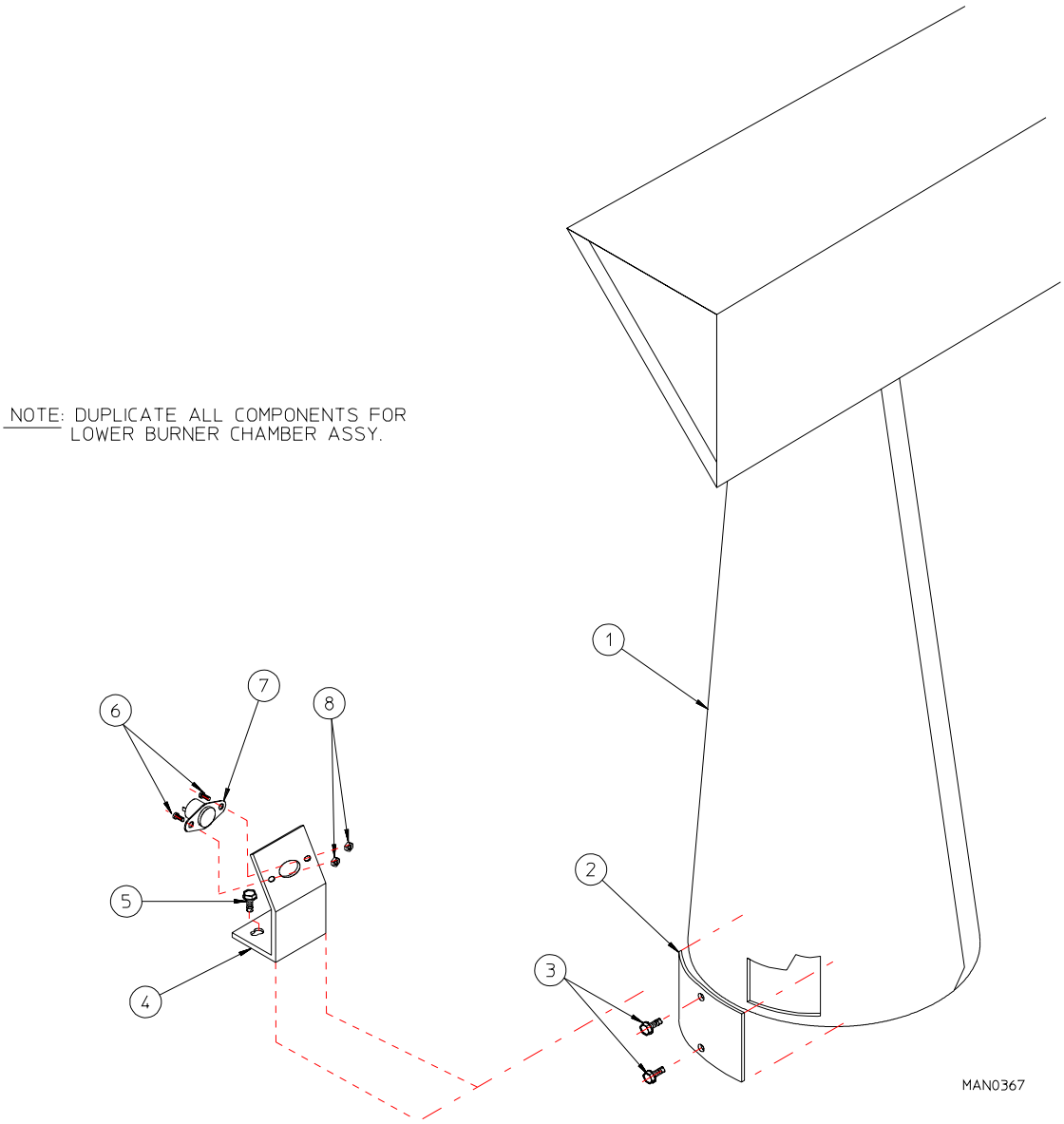

Illus. No.	Part No.	Qty.	Description
1	800526	1	Gas Burner Chamber Assembly (includes illus. nos. 1 through 3)
2	318006	1	Flame Viewing Plate
3	150300	2	#10-16 x 1/2” Hex Washer TEK Screw
4	802502	1	Hi-Limit Bracket Assembly (includes illus. nos. 4 through 8)
	319710	1	Hi-Limit Bracket ONLY
5	150301	2	#8-18 x 7/16” Phillips Pan Head TEK Screw
6	150001	2	#6-32 x 1/2” Right-Hand Machine Screw
7	130301	1	225° Hi-Limit Thermostat
8	151000	2	#6-32 Pal Nut

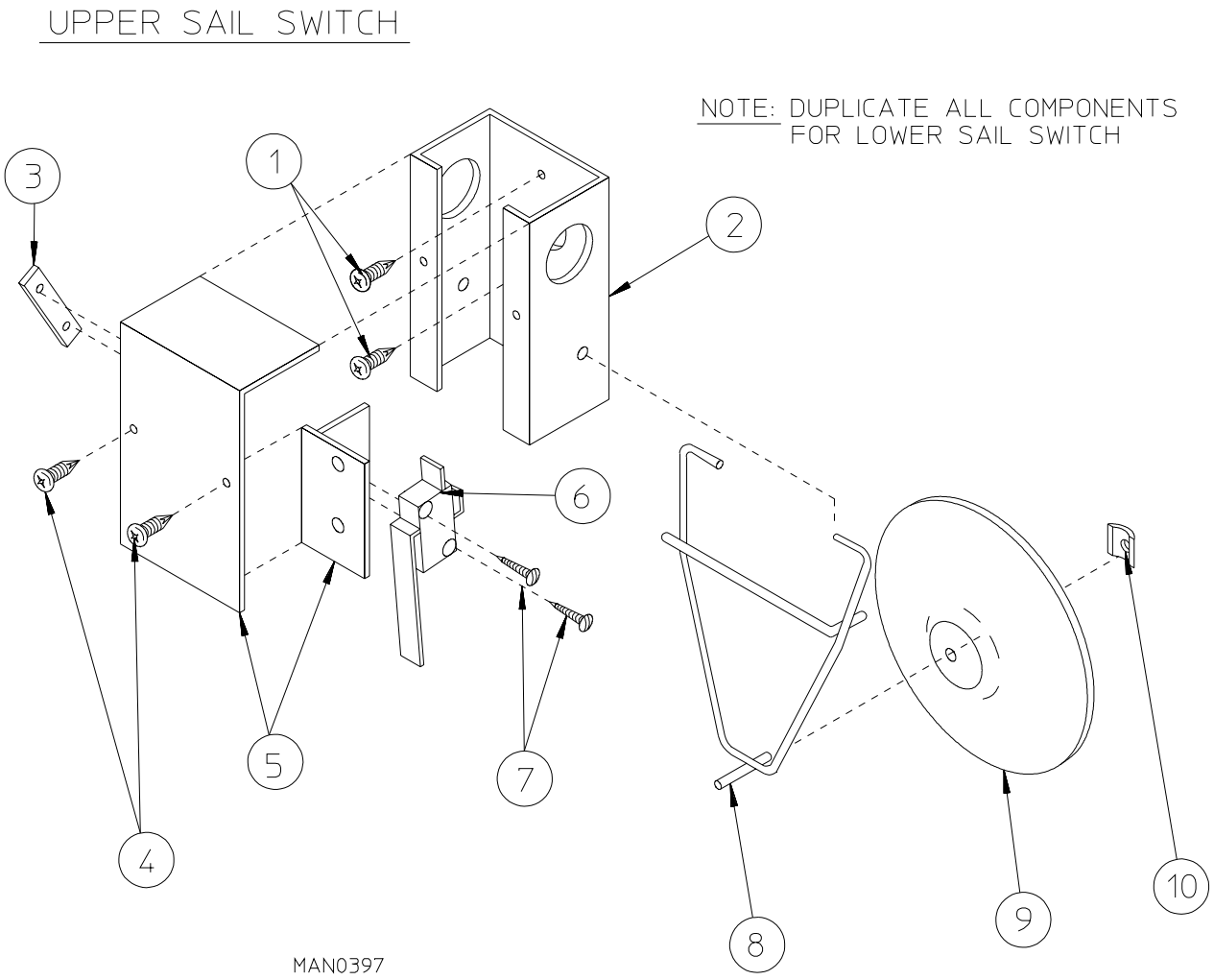

Illus. No.	Part No.	Qty.	Description
1	150301	2	#8-18 x 7/16” Phillips Pan Head TEK Screw
2	802803	1	Sail Switch Box Assembly (includes illus. nos. 2 through 10)
3	154004	1	Twin Speed Nut
4	150300	2	#10-16 x 1/2” Hex Washer TEK Screw
5	802799	1	Sail Switch Box Cover and Bracket
6	122200	1	Sail Switch
7	150303	2	#4 x 3/4” Pan Head Machine Screw
8	105500	1	Sail Switch Actuator Rod
9	319202	1	Sail Switch Damper
10	154002	1	1/8” Push-On Fastener

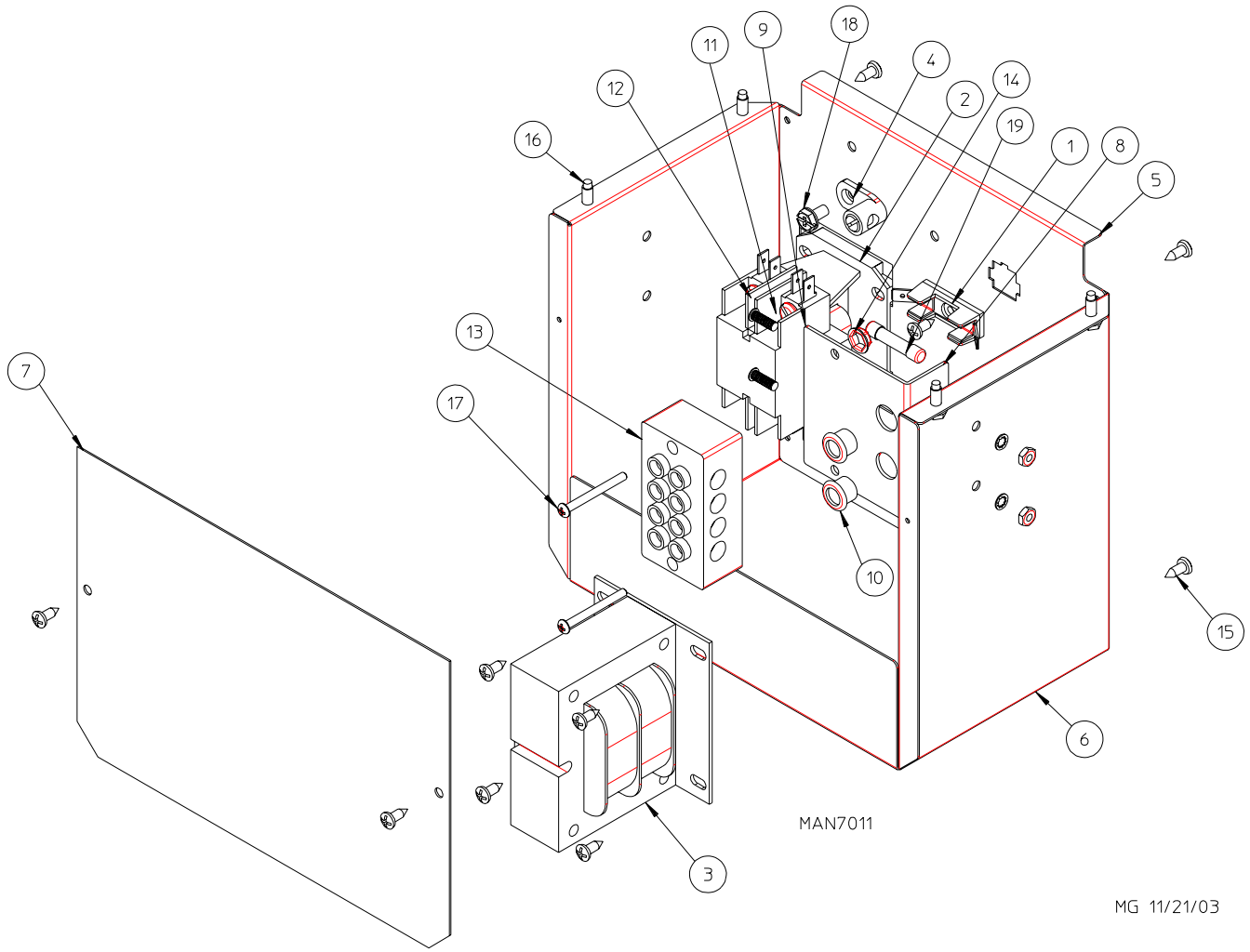

Illus. No.	Part No.	Qty.	Description
1	136008	1 or 2	Fuse Holder
2	132498	1	Double Pole 24 VAC Motor Contactor
3	855255	1	Transformer Assembly (120V)
	855256	1	Transformer Assembly (208-240V)
4	121010	1	Terminal Lug
5	315293	1	Rear Wire Box Back Plate
6	315294	1	Rear Wire Box Body
7	315300	1	Rear Wiring Box Cover
8	353142*	1	Power Block Mounting Bracket
9	153528*	2	#8-32 x 1/2” Self-Clinching Stud
10	121300*	2	Open / Closed Bushing
11	153012*	2	Star Washer
12	152001*	2	#8-32 x 3/8” Hex Nut
13	120701*	1	4-Position Terminal Block
14	151000*	2	#6-32 Pal Nut
15	150301	11	#8-18 x 7/16” Phillips Pan Head TEK Screw
16	150300	4	#10-16 x 1/2” Hex Washer TEK Screw
17	150009*	2	#6-32 x 1-1/2” Phillips Machine Screw
18	120910	1	Green Ground Screw
19	136049	1 or 2	3/4-amp Slo-Blo Fuse

* Parts for top electric box only.

3-Phase (3ø) Motor, Electrical Relay Panel Assembly

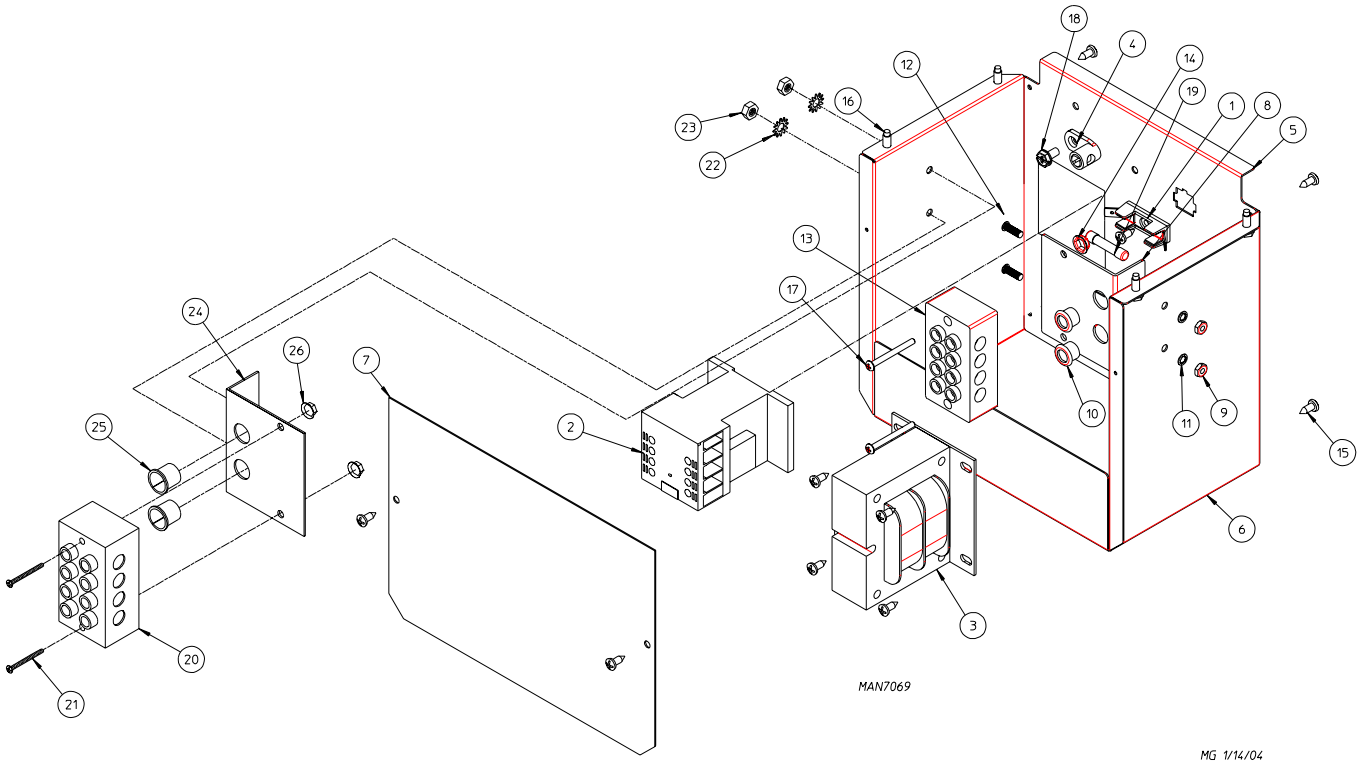

Illus. No.	Part No.	Qty.	Description
1	136008	2	Fuse Holder
2	132495	1	Three Pole 24 VAC Motor Contactor
3	855256	1	Transformer Assembly (208-240V)
4	121010	1	Terminal Lug
5	315293	1	Rear Wire Box Back Plate
6	315294	1	Phase 7 Rear Wire Box Body
7	315300	1	Rear Wiring Box Cover
8	353142*	1	Power Block Mounting Bracket
9	152001*	2	3/8” Hex Nut
10	121300*	2	Open / Closed Bushing
11	153012*	2	Star Washer
12	153528*	4	1/2” Clinch Stud
13	120701*	1	4-Position Terminal Block
14	151000*	2	Pal Nut
15	150301	12	7/16” Phillips TEK Screw
16	150300	4	1/2” Hex TEK Screw
17	150009*	2	1-1/2” Phillips Machine Screw
18	120910	1	Green Ground Screw
19	136057	2	1/2-amp Slo-Blo Fuse
20	120701*	1	4-Position Terminal Block
21	150009*	2	#6-32 x 1-1/2” Phillips Machine Screw
22	153012*	2	Star Washer
23	152001*	2	3/8” Hex Nut
24	353142*	1	Power Block Mounting Bracket
25	121300*	2	Open / Closed Bushing
26	151000*	2	#6-32 Pal Nut

* Parts for top pocket electric box only.

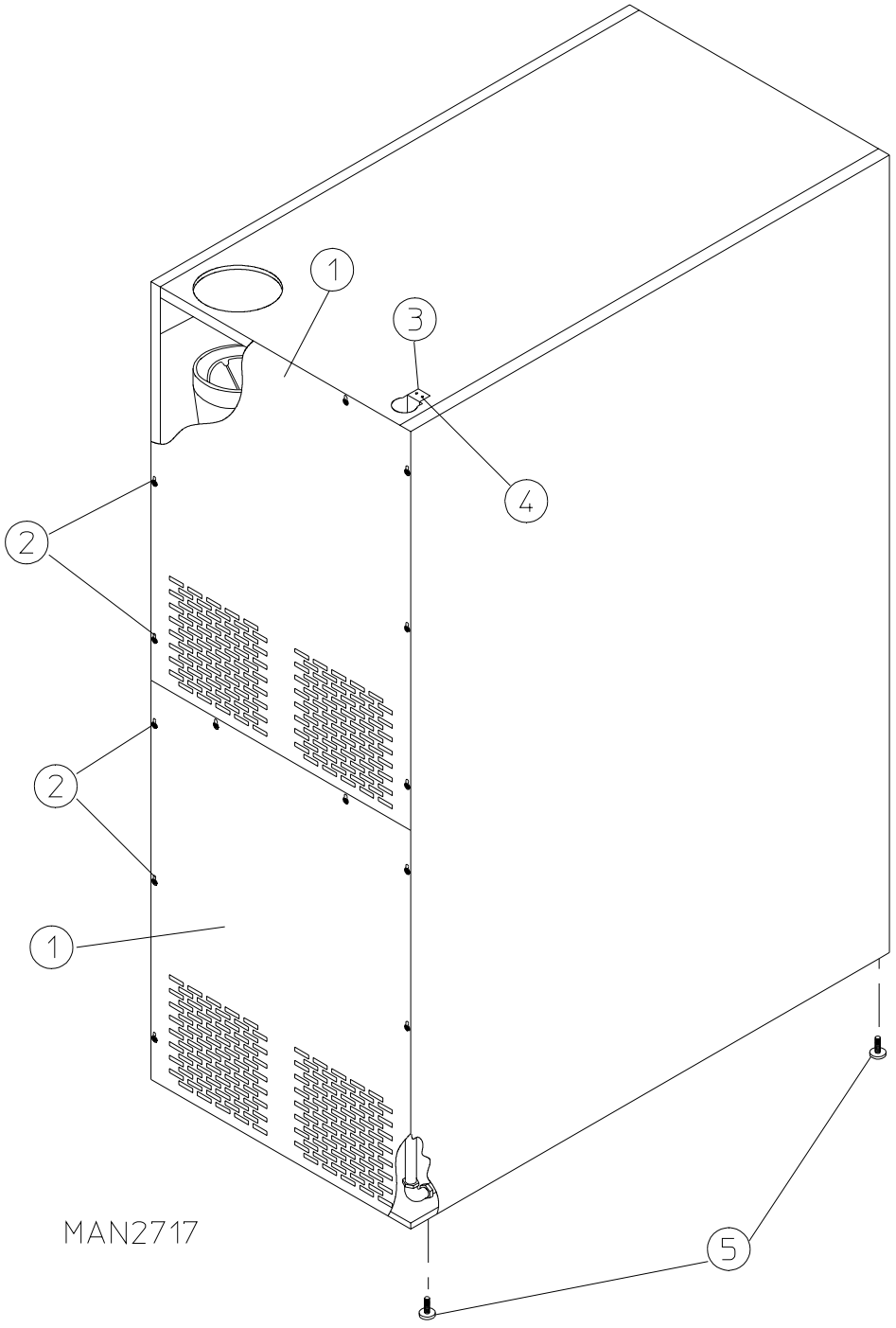

Illus. No.	Part No.	Qty.	Description
1	330998	2	Upper / Lower Back Guard Assembly (for models mfd. as of February 3, 2009)
	311014	2	Upper / Lower Back Guard Assembly (for models mfd. prior to February 3, 2009)
2	150301	16	#8-18 x 7/16” Phillips Pan Head TEK Screw
3	318702	1	Top Pipe Support Bracket ONLY
4	150300	2	#10-16 x 1/2” Hex Washer TEK Screw
5	103500	4	Adjustable Leveling Leg

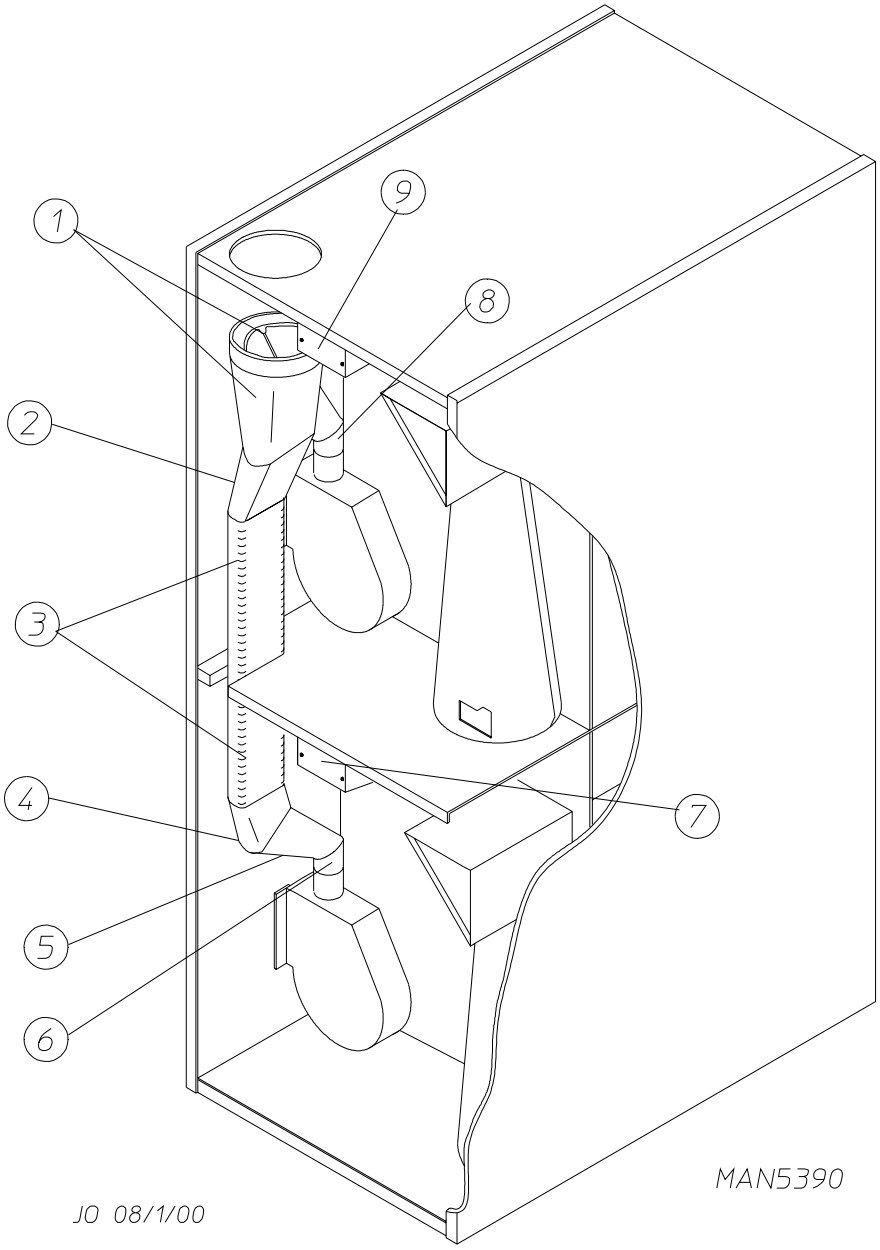

Illus. No.	Part No.	Qty.	Description
1	880505	1	Wye Branch Damper Assembly
2	143527	1	6” Round x 7” Oval Straight Boot
3	143539	1	15-1/2” Long x 7” Oval Duct
4	143537	1	7” Oval x 45° Elbow
5	143538	1	6” Round x 7” Oval Straight Boot
6	143536	2	6” Round x 45° Elbow
7	315300	1	Rear Wiring Box Cover
8	143536	2	6” Round x 45° Elbow
9	315300	1	Rear Wiring Box Cover
	117505	*	Aluminum Duct Tape (sold by the foot) … Not Illustrated

* As required.

Part No.	Description
112280	“Clean Lint Screen” Label
112704	“Phase 7.3 Coin Program Location Summary” Label
114001	“Caution – Exhaust / Lint Screen” Label
114006	“Warning – Fire Hazards” Label
114533	“Black / White / Green Ground” Label
120100	3/8” Straight (BX) Connector
120300	3/8” x 45° (BX) Connector
120400	3/8” Red Jacket (BX) Insulator
120500	3/8” Jiffy Clip (BX Retainer Clip)
120600	3/8” Greenfield (BX)
120800	1/4” In-Line Connector
120802	Red Butt Connector
120902	#74B Wire Nut
120903	Crimp-On Wire Nut
121006	#10 Insulated Ring Terminal
121014	1/4” Insulated (female) Terminal
121499	5-1/2” Harness Tie
121500	8” Harness Tie
122804	Manometer (water column test gauge)
170194	Tumbler Lint Cleaning Brush
404502	White Brush-In-Cap Bottle Touch-Up Paint
404515	Coral Blue Brush-In-Cap Bottle Touch-Up Paint
404516	Ivory Brush-In-Cap Bottle Touch-Up Paint