American Dryer Corp.

# PHASE 6
# OPL
# USER'S MANUAL

**American Dryer Corporation**
88 Currant Road
Fall River, MA 02720-4781
Telephone: (508) 678-9000 / Fax: (508) 678-9447
E-mail: techsupport@amdry.com
www.amdry.com

061897DMG/tf

**ADC** Part No. 113022

# Retain This Manual In A Safe Place For Future Reference

Please read this manual carefully to thoroughly familiarize yourself with the Phase 6 OPL computer system features, operational instructions, and programming characteristics. This manual contains important information on how to employ all the features of your new **ADC** dryer in the safest and most economical way.

**American Dryer Corporation** products embody advanced concepts in engineering, design, and safety. If this product is properly maintained, it will provide many years of safe, efficient, and trouble-free operation.

We have tried to make this manual as complete as possible and hope you will find it useful. **ADC** reserves the right to make changes from time to time, without notice or obligation, in prices, specifications, colors, and material, and to change or discontinue models.

Replacement parts can be ordered from your distributor or the **ADC** factory. When ordering replacement parts from the factory, you can FAX your order to **ADC** at (508) 678-9447 or telephone your orders directly to the **ADC** Parts Department at (508) 678-9000. Please specify the dryer **model number** and **serial number** in addition to the **description** and **part number**, so that your order is processed accurately and promptly.

**"IMPORTANT NOTE TO PURCHASER"**

Information must be obtained from your local gas supplier on the instructions to be followed if the user smells gas. These instructions must be posted in a prominent location near the dryer.

## IMPORTANT

**YOU MUST DISCONNECT and LOCKOUT THE ELECTRIC SUPPLY and THE GAS SUPPLY or THE STEAM SUPPLY BEFORE ANY COVERS or GUARDS ARE REMOVED FROM THE MACHINE TO ALLOW ACCESS FOR CLEANING, ADJUSTING, INSTALLATION, or TESTING OF ANY EQUIPMENT per OSHA** (Occupational Safety and Health Administration) **STANDARDS.**

## FOR YOUR SAFETY

**DO NOT** STORE OR USE GASOLINE OR OTHER FLAMMABLE VAPOR AND LIQUIDS IN THE VICINITY OF THIS OR ANY OTHER APPLIANCE.

**DO NOT** DRY MOP HEADS IN THE DRYER.

**DO NOT** USE DRYER IN THE PRESENCE OF DRY CLEANING FUMES.

## WARNING

**CHILDREN SHOULD NOT BE ALLOWED TO PLAY ON OR IN THE DRYERS.**

**CHILDREN SHOULD BE SUPERVISED IF NEAR DRYERS IN OPERATION.**

## CAUTION

DRYERS SHOULD NEVER BE LEFT UNATTENDED WHILE IN OPERATION.

## IMPORTANT

**PLEASE OBSERVE ALL SAFETY PRECAUTIONS displayed on the equipment and specified in the installation manual included with the dryer.**

Dryers ***must not be*** installed or stored in an area where it **will be** exposed to water or weather.

# *Table of Contents*

# SECTION I

## INTRODUCTION

### Phase 6 "On-Premise Laundry" Microprocessor Drying System

The **American Dryer Corporation's** Phase 6 On-Premise Laundry (OPL) Drying System has been designed with super performance in mind to provide for better temperature regulation, efficiency, performance, consistency, and faster drying times.

Specifically, **ADC's** Phase 6 OPL System's higher performance emanates from the following enhancements:

1. The ability to better control the temperature inside the basket (tumbler) throughout the various cycles.

2. The Phase 6 OPL microprocessor controller (computer) responds immediately to any temperature variations from temperature selection, which enables the control temperature band to be ± 3º from this selected drying temperature. The narrower temperature control band greatly increases system efficiency, since it takes less heat to maintain a given temperature than to rise to a given temperature.

Among its many amenities, **ADC's** Phase 6 OPL Drying System has a true Automatic Drying Cycle. The Phase 6 OPL Automatic Drying Cycle **(Patent No. 4,827,627)** principle is based on one of the most fundamental laws of thermodynamics which governs the flow of heat in thermal systems.

Utilizing this microprocessor technology, the user simply has to place the load in the dryer and push one single button to start drying cycle. The Phase 6 OPL microprocessor controller (computer) will directly monitor the moisture content in the load and stop the drying cycle automatically when the selected percentage of extraction (dryness level) is reached.

The **ADC** Phase 6 OPL Automatic Drying Cycle **(Patent No. 4,827,627)** virtually eliminates **ALL** guess work. The Phase 6 OPL microprocessor controller (computer) determines how much drying time is needed and compensates for various types of fabrics and load sizes, thus, avoiding damage to fabrics by over drying, as well as avoiding wasted time and energy for any given load. Once the Phase 6 microprocessor controller (computer) determines the load is dry, the microprocessor controller (computer) will go into cool down cycle **(Patent No. 4,827,627)** until the preprogrammed time or temperature is reached, and then shuts the dryer off automatically.

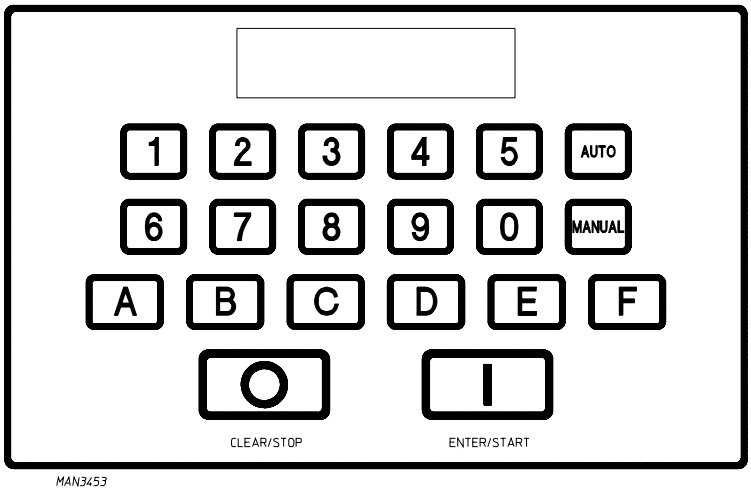

# SECTION II

## FEATURES

A. **Dependable Microprocessor Solid State Integrated Circuitry** - to eliminate as many moving parts as possible.

B. **Program Changes Are Easily Made At The Keyboard** - actual programs are viewed at the light emitting diode (L.E.D.) display for verification.

C. **Automatic Drying Cycle (Patent No. 4,827,627)** - computerized monitoring of load dryness for precise, fast, and efficient drying.

D. **Timed (Manual) Drying Cycle** - for special loads, programming allows for a specific amount of time in minutes for both drying and cool down cycles.

E. **Preprogrammed Cycles** - the Phase 6 OPL microprocessor controller (computer) can store in its memory six (6) preprogrammed cycles in either the Automatic Drying Mode **(Patent No. 4,827,627)** or Manual Drying Mode.

F. **Manually Loaded Cycles** - for occasional or one-time special loads, the user can set a specific program in either the Automatic Drying Cycle (**Patent No. 4,827,627**) or Timed Mode.

G. **Variable (Programmable) Fabric/Temperature Selections** - accommodates the type of fabric to be dried.

H. **Controlled Cool Down Program** - helps eliminate wrinkled loads.

I. **L.E.D. Display** - informs user of cycle status, programs and displays important diagnostic and fault codes.

J. **Anti-Wrinkle Program** - helps keep items wrinkle-free when they are not removed from the dryer promptly at the end of the drying and cooling cycles.

K. **Diagnostics** - major circuits, including the door switch, microprocessor temperature sensor, motor and heat output circuits are monitored.

L. **Audible Tone Signal** - a tone will sound for each keyboard (touch pad) entry. Additionally, the tone will sound at the end of the drying and cooling cycles to indicate the cycle is complete.

M. **Temperature Conversion Status** - temperature-related programs can be set in either Fahrenheit (ºF) or Celsius (ºC). **ALL** temperatures will automatically convert to the corresponding values (+/- 1º F) when changes are made.

N. **Hi-Temperature Protection** - if the Phase 6 OPL microprocessor controller (computer) senses that the temperature in the basket (tumbler) has reached 221º F, it will shut the dryer down completely, and a default code will appear in the L.E.D. display indicating an overheating problem.

O. **Cycle Preview** - entire dryer parameters (programs) or the preprogrammed cycles are displayed for verification upon a coded entry to the keyboard (touch pad).

P. **Reversing Option** - helps eliminate wrinkling due to the balling up or tangling of large items. Certain models have the reversing option where the basket (tumbler) will turn in the forward direction for 2 minutes, stop for 5-seconds, and then proceed in the reverse direction for 2 minutes. This process is repeated throughout the drying and cooling cycles.

Q. **Rotation Sensor Selection** - this feature allows the Phase 6 OPL microprocessor controller (computer) to monitor the rotation of the basket (tumbler). If the basket (tumbler) should fail to rotate, the Phase 6 OPL microprocessor controller (computer) will disable **ALL** outputs, stopping the dryer and a failure code will be displayed on the light emitting diode (L.E.D.).

R. **RPM** - Phase 6 microprocessor control (computer) also displays basket (tumbler) RPM by pressing the "ENTER/START" ⊡ Key and releasing it then press the "ENTER/START" ⊡ Key and holding the tumbler RPM will be displayed. (Rotational Sensor **must be** active for this RPM Features).

S. **Clean Lint** - this routine monitors the response of the "Lint Count" register. The register contains the acceptable limit of dryer cycles the dryer will be allow to operate before the microprocessor locks the user out. This routine will first prompt the user to "REAdY CLEAN LINT" two (2) cycles prior to locking out. Once the routine prompts the user "CLEAN LINT" the dryer is now in a locked state and **will not be** cleared until the Lint Drawer has been cleaned. Once the Lint Drawer has been opened the display will read "LINT dOOR" and when the Lint Drawer has been closed, the display will read "REAdY." The dryer circuit is now active and can be programmed.

# SECTION III

## PROGRAM SELECTIONS

### A. PREPROGRAMMED CYCLES

The Phase 6 OPL microprocessor controller (computer) can store in its memory six (6) preprogrammed cycles (Keys "A" through "F" on the keyboard [touch pad]). This allows the user to have the six (6) most commonly used cycles, requiring only the push of a single keyboard (touch pad) entry to start the dryer.

These preprogrammed cycles can be set in either the Automatic Drying Cycle (Mode) **(Patent 4,827,627)** where the drying cycle will end when the percentage of extraction (dryness level) programmed has been reached or in the Timed (Manual) Drying Cycle (Mode) where the dryer will operate for the specific drying time programmed. These cycles can be programmed in any combination.

Once the drying cycle is completed, the Phase 6 OPL microprocessor controller (computer) then goes into the Cool Down Cycle where the articles are tumbled in room temperature air. Once the programmed Cool Down Cycle is completed, the dryer will shut off automatically.

With the Anti-Wrinkle Program active, when the cooling cycle is completed and the dryer is shut off, if the main door is not opened, the load will be tumbled without heat (i.e., for 20-seconds every 90-seconds). This process is repeated until either the main door is opened or 10 minutes has elapsed, whichever comes first.

Preprogrammed Cycle Selections:

1. Automatic Drying Cycle (Mode) **(Patent No. 4,827,627)**

   a. For optional reversing models, the Phase 6 OPL microprocessor controller (computer) can be programmed to reverse or not reverse (single direction rotation).

   b. Anti-Wrinkle Program - active or non-active.

   c. Drying Temperature - programmable from 160º F to 200º F in one-degree increments or from 71º C to 93º C in one-degree increments.

   d. Dryness Level (percentage of extraction) - programmable from 90% to 100% in one-percent increments.

   e. Cool Down Time - programmable from 0 to 99 minutes in one-minute increments.

   f. Cool Down Temperature - programmable from 70º F to 100º F in one-degree increments or from 20º C to 37º C in one-degree increments.

   g. A Factor

   h. b Factor

2. Timed (Manual) Cycle (Mode)

   a. For optional reversing models, the Phase 6 OPL microprocessor controller (computer) can be programmed to reverse or not reverse (single direction rotation).

   b. Anti-Wrinkle Program - active or non-active.

   c. Drying Time - programmable from 0 to 99 minutes in one-minute increments.

   d. Drying Temperature - programmable from 100º F to 200º F in one-degree increments or from 37º C to 93º C in one-degree increments.

   e. Cool Down Time - programmable from 0 to 99 minutes in one-minute increments.

   f. Cool Down Temperature - programmable from 70º F to 100º F in one-degree increments or from 20º C to 37º C in one-degree increments.

   g. For optional reversing models, the Spin Time can be programmed from 30-seconds to 120-seconds in one-second increments.

   h. For optional reversing models, the Stop (Dwell) Time can be programmed from 5-seconds to 10-seconds in one-second increments.

**ALL** six (6) preprogrammed cycles have been programmed by the factory as outlined on **page 51 and page 52**. However, even though these are the most common cycles used, they **should be** reviewed to ensure they meet the location application or needs. Should changes be found necessary, refer to the Programming Section of this manual.

## B. MANUALLY LOADED CYCLES

For occasional or one-time special loads, the operator must set the specific programs needed. This cycle is not stored within the Phase 6 OPL microprocessor controller (computer) and **must be** entered each and every time.

The Manually Loaded Cycle can be set in either the Automatic Drying Cycle (Mode) **(Patent No. 4,827,627)** or the Timed (Manual) Drying Cycle (Mode).

Manually Loaded Cycle Selections:

1. Automatic Drying Cycle (Mode) **(Patent No. 4,827,627)**

   a. Drying Temperature - programmable from 160º F to 200º F in one-degree increments or from 71º C to 93º C in one-degree increments.

   b. Dryness Level (percentage of extraction) - programmable from 90% (less dry) to 100% (more dry) in one-percent increments.

   c. For optional reversing models, depending on what the system parameter (program) is set for, the operator has the choice of reverse or no reverse (single direction rotation).

2. Manually Drying Cycle (Mode)

   a. Drying Time - programmable from 0 to 99 minutes in one-minute increments.

   b. Cool Down Time - programmable from 0 to 99 minutes in one-minute increments.

   c. Drying Temperature - programmable from 100º F to 200º F in one-degree increments or from 37º C to 93º C in one-degree increments.

## C. AUTOMATIC DRYING CYCLE (MODE) (PATENT NO. 4,827,627)

In this mode, the Phase 6 OPL microprocessor controller (computer) determines how much drying time is needed and compensates for various types of fabric and load sizes, **ALL** automatically. The Phase 6 OPL microprocessor controller (computer) accomplishes this by calculating the dryness level (percentage of extraction) using the temperature selected, as well as, the "A" and "B" factors preset by the factory.

The Phase 6 OPL microprocessor controller (computer) monitors the first three (3) heat peaks (slopes), at which time it calculates the "A" Slope and "B" (heat loss) factors along with the percentage of extraction selected. When the Phase 6 OPL microprocessor controller (computer) determines that **ALL** the factors are met, the drying cycle will end, and the dryer will go into the cool down cycle.

Automatic Drying Cycle (Mode) (Patent No. 4,827,627) Selections:

1. Drying Temperature (fabric) - programmable from 160º to 200º F in one-degree increments or from 71º C to 93º C in one-degree increments.

2. Dryness Level (percentage of extraction) - programmable from 90% (less dry) to 100% (more dry) in one-percent increments.

3. Cool Down Time - programmable from 0 to 99 minutes in one-minute increments.

4. Cool Down Temperature - programmable from 70º F to 100º F in one-degree increments or from 20º C to 37º C in one-degree increments.

5. Factors (System Parameter Program Location 2 [Key "2"])

   a. Factor "A" Slope Program - the Phase 6 OPL microprocessor controller (computer) monitors how long it takes to get to the selected temperature.

      1) Program selections are 1 through 9 in increments of one (1).

   b. Factor "B" Heat Loss (offset) Program - this factor setting is dependent upon the model dryer and the type of heating unit.

      1) Program selections are 1 through 99 in increments of one (1).

The “A” and “B” Factors have been preprogrammed by the factory as outlined on **page 51 and page 52** and **SHOULD NOT BE CHANGED** unless the Phase 6 0PL microprocessor controller (computer) should fail and is being replaced. The replacement Phase 6 0PL microprocessor controller (computer) **MUST BE PROGRAMMED** for the particular dryer model and heating unit as shown in the “A” and “B” Factor table on **page 56** of this manual.

6. For Optional Reversing Models - the Phase 6 OPL microprocessor controller (computer) can be programmed to reverse or no reverse (single direction rotation).

7. When used in conjunction with the Preprogrammed Cycles, programming allows the Anti-Wrinkle Program to be active or non-active.

## D. TIMED (MANUAL) DRYING CYCLE (MODE)

This drying cycle is intended for special loads where a specific amount of drying time and cooling time is needed, especially for fine, delicate items which require very low temperatures and long drying and/or cool down time periods.

Timed (Manual) Cycle (Mode) Selections:

1. Drying Time - programmable from 0 to 99 minutes in one-minute increments.

2. Cool Down Time - programmable from 0 to 99 minutes in one-minute increments.

3. Drying Temperature - programmable from 100º F to 200º F in one-degree increments or from 37º C to 93º C in one-degree increments.

4. For optional reversing models, the Phase 6 OPL microprocessor controller (computer) can be programmed to reverse or no reverse (single detection rotation).

5. When used in conjunction with the preprogrammed cycles, programming allows the Anti-Wrinkle Program to be active or non-active.

## E. TEMPERATURE SELECTIONS (DRYING TEMPERATURES)

Operating Temperature Selections:

1. Automatic Drying Cycle (Mode) **(Patent No. 4,827,627)** - programmable from 160º to 200º F in one-degree increments or from 71º C to 93º C in one-degree increments.

2. Timed (Manual) Drying Cycle (Mode) - programmable from 100º F to 200º F in one-degree increments or from 37º C to 93º C in one-degree increments.

## F. COOL DOWN CYCLE

Cool Down Cycle Selections:

1. Preprogrammed Cycles

   a. Automatic Drying Cycle (Mode) **(Patent No. 4,827,627)**

      1) Cool Down Time - 0 to 99 minutes in one-minute increments.

      2) Cool Down Temperature - 70º F to 100º F in one-degree increments or from 20º C to 37º C in one-degree increments.

   b. Timed (Manual) Drying Cycle (Mode)

      1) Cool Down Time - 0 to 99 minutes in one-minute increments.

**NOTE:** The Cool Down Cycle will run either until the Cool Down Temperature is reached or until the Cool Down Time has expired, whichever comes first.

2. Manually Loaded Cycles

   a. Automatic Drying Cycle (Mode) **(Patent No. 4,827,627)**

      1) Cool Down Time - 0 to 99 minutes in one-minute increments.

      2) Cool Down Temperature - 70º F to 100º F in one-degree increments or from 20º C to 37º C in one-degree increments.

   b. Timed (Manual) Drying Cycle (Mode)

**NOTE:** The Cool Down Cycle will run either until the Cool Down Temperature is reached or until the Cool Down Time has expired, whichever comes first.

## G. L.E.D. DISPLAY

The light emitting diode (L.E.D.) display informs the user of cycle status, program verification, and displays important diagnostic and fault codes. A complete listing of the various display codes and their meanings are shown on **page 24** of this manual.

Display Selections:

1. Display Status

   a. While the dryer cycle is in progress, programming allows the L.E.D. display to read only the Cycle In Progress or only the Basket (tumbler) Temperature. Programming also allows a flash display whereby the L.E.D. display will flash back and forth between Cycle In Progress and Temperature.

      1) Both the Cycle In Progress and Temperature can be programmed to flash from 1-second to 15-seconds in one-second increments.

2. Cycle in Progress Display Status

   a. Automatic Drying Cycle (Mode) **(Patent No. 4,827,627)** - the light emitting diode (L.E.D.) display reads Percentage of Extraction in the cycle in progress and then Cool Down.

   b. Timed (Manual) Cycle (Mode) - the L.E.D. display reads Drying Time and/or Cool Down Time counting downwards as time elapses.

3. Indicator Dots on the L.E.D. Display

   a. The indicator dots are an indicator as to the various Phase 6 OPL microprocessor controller (computer) output functions. Additionally, there are also indicators on the back side of the Phase 6 OPL microprocessor controller (computer) to verify the outputs of the relay.

      1) Drive Motor (blower motor on reversing models).

      2) Heat On (active).

      3) Reversing models have indicators for the forward (clockwise [CW]) basket (tumbler) rotation and reverse (counterclockwise [CCW]) basket (tumbler) rotation.

## H. CYCLE IN PROGRESS TEMPERATURE DISPLAY

While the dryer cycle is in progress, the temperature in the basket (tumbler) can be displayed by pressing the "ENTER/START" ⊡ Key. The temperature will be displayed in either Fahrenheit (ºF) or Celsius (ºC), depending on how the temperature conversion status program is set.

## I. TEMPERATURE CONVERSION STATUS

Temperature related programs are programmable to be operated in either Fahrenheit (ºF) or Celsius (ºC). Programs affected are:

1. Temperature Display Mode

2. Temperature Selections (drying temperatures)

3. Cool Down Temperatures

**IMPORTANT:** When changing the temperature conversion status from Fahrenheit or Celsius or vice versa, **ALL** the Temperature Selections and Cool Down Temperatures **will be** changed accordingly. The Phase 6 OPL microprocessor controller (computer) automatically calculates and converts the temperatures in these programs to the previously set value. For example, when changing from ºF to ºC, if the preprogrammed Cycle "A" drying temperature was set for 160º F, the Phase 6 OPL microprocessor controller (computer) will change to 71º C (+/- [1] one-degree Celsius).

## J. ANTI-WRINKLE PROGRAM

This program keeps items wrinkle-free when they are not removed from the dryer promptly at the end of the drying cycle and/or cooling cycle.

When this program is active (on) and the drying and cooling cycles are completed, the dryer will shut off, the tone will sound, and the light emitting diode (L.E.D.) display will read "dONE." If the door is not opened, the Phase 6 OPL microprocessor controller (computer) will wait until the Anti-Wrinkle Guard Delay Time has expired at which time the basket (tumbler) will rotate (without heat) for the programmed Anti-Wrinkle Guard On Time. The Phase 6 OPL microprocessor controller (computer) will repeat this process until the maximum Anti-Wrinkle Guard Time has expired or until the door is opened, whichever comes first.

Anti-Wrinkle Program Selections:

1. Anti-Wrinkle Guard Active or No Anti-Wrinkle Guard

2. Guard Delay Time

   a. Programmable from 10-seconds to 255-seconds in one-second increments.

3. Guard On Time

   a. Programmable from 10-seconds to 60-seconds in one-second increments.

4. Maximum Guard Time

   a. Programmable from 1 minute to 99 minutes in one-minute increments.

## K. AUDIBLE TONE SIGNAL

A tone will sound for each keyboard (touch pad) entry made. The tone will also sound at the end of the drying cycle and cooling cycle to indicate that the cycle is complete. When the Anti-Wrinkle Program is active, programming allows for the elimination of the tone during the Anti-Wrinkle Program, with the exception of the keyboard (touch pad) entry tone, which is fixed at approximately 1-second. Programming allows the tone to be set from 0 to 15-seconds in one-second increments.

## L. PREPROGRAMMED CYCLE PREVIEW

The parameters (programs) of the preprogrammed cycles can be displayed for verification. To view a preset program (parameter), simply press the "ENTER/START" ⊡ Key and the desired preset program (parameter). The L.E.D. display will read the parameters (programs) set, then return to the "REAdY" display mode.

## M. REVERSING OPTION

This program helps eliminate wrinkling due to balling up or tangling of large items.

Reversing Option Selections:

1. Reverse or No Reverse (preprogrammed cycles ONLY)

2. Select Reverse or Always Reverse (manually loaded cycles ONLY)

3. Basket (tumbler) Spin Time and Dwell (Stop) Time

   a. Fixed in the Automatic "AUTO" Mode and **cannot be changed**.

      1) Spin Time - Forward - 3 minutes, Reverse - 2 minutes.

      2) Dwell (stop) Time - 5-seconds.

4. Basket (tumbler) Spin Time and Dwell (Stop) Time

   a. Programmable in the Manual Mode.

      1) Spin Time - programmable from 30-seconds to 120-seconds in one-second increments.

      2) Dwell (stop) Time - programmable from 5-seconds to 10-seconds in one-second increments.

## N. DIAGNOSTICS

Three (3) major circuits of the Phase 6 OPL microprocessor controller (computer) are monitored. They are as follows:

1. Microprocessor Heat Sensor Circuit fault will shut the drying cycle off, and the light emitting diode (L.E.D.) display will read "TEMP SENSOR FAIL CHECK TEMP SENSOR FUSE."

2. If there is a fault in the Door Switch Circuit, the L.E.D. display will read "LINT dOOR or MAIN dOOR." This display code will also appear if while a cycle is in progress the lint door or main door was opened. This will shut the drying cycle off and no keyboard (touch pad) entry will be accepted until the main door or lint door is closed.

   a. There are two (2) red indicator lights labeled LINT and MAIN on the back side of the Phase 6 OPL microprocessor controller (computer) to help in diagnosing this specific fault/failure.

3. If the Basket (tumbler) Fails To Rotate, a signal will appear on the L.E.D. display "Rotate Sensor Fail" (Program Location 2 [PL 2]). Rotate Sensor **must be** active for this display.

High Temperature Protection - if the Phase 6 microprocessor controller (computer) senses that the temperature in the basket (tumbler) has exceeded 220º F, it will shut the dryer down completely, and the default code "BURNER SAFETY FAIL" will appear in the L.E.D. display, indicating that there is an overheating problem. The "BURNER SAFETY FAIL" default code will be displayed until the temperature has dropped down to 220º F or lower, and then the "CLEAR/STOP" ⊡ Key **must be** pressed, at which time the L.E.D. display will return to "REAdY."

## O. SYSTEM PARAMETERS (PROGRAM LOCATIONS/REVIEW)

The system parameters are the programs which, once set by the factory, rarely need to be changed in the field. These system parameters (programs) are stored in the memory and catalogued as program locations (Keys "2," "5," "8," and "0").

**ALL** of the parameters affect the manually loaded program cycles, and some affect the preprogrammed cycles. The information on **page 53** shows the parameters of each program location, as well as what cycles are affected. The programming limits of each program location are shown on **page 54 and page 55**. Additionally, the parameters preset by the factory are shown on **page 51 and page 52**.

Review system parameters (programs) with one touch of the keyboard (touch pad) (Key "8"). The Phase 6 microprocessor controller (computer) will automatically display Program Locations "2," "5," "8," and "0."

1. Program Location 2 (Key 2)

   a. Dryer Operation "Specific Heat Selection" - this program controls which heat source will be used in the program. The program will be operated in either "GAS," "STEAM," or "ELECTRIC," depending on the heat service applied to the dryer.

   b. Temperature Conversion Status - this program controls whether the temperature-related programs will be operated in Fahrenheit (ºF) or Celsius (ºC). The programs affected are as follows:

      1) Temperature Display Mode.

      2) Temperature Selections (drying temperatures).

      3) Cool Down Temperatures.

| | |
|---|---|
| **IMPORTANT:** | The Phase 6 OPL microprocessor controller (computer) automatically calculates and converts the temperatures in these programs to the previously set value. For example, when changing from º F to º C, if the preprogrammed Cycle "A" drying temperature was set for 160º F, the Phase 6 OPL microprocessor controller (computer) will change to 71º C (+/- one-degree Celsius). |

   c. Select Reverse - for optional reversing models, this program allows the operator to have a choice of Reverse or No Reverse (single direction rotation) basket (tumbler) action in the manually loaded cycles ONLY.

      1) Always Reverse (**ALL** REV) - in this operational mode the operator has no choice. Any manually loaded cycle entered will be a reversing cycle.

      2) Select Reverse (SEL REV) - when this parameter (program) is chosen, the Phase 6 OPL microprocessor controller (computer) will prompt the operator to decide whether or not the manually loaded cycle entered is to be a reversing cycle.

d. Rotation Sensor Selection - this option allows the Phase 6 OPL microprocessor controller (computer) to monitor the rotation of the basket (tumbler).

e. Factor "A" (Slope program) - this parameter (program) is one of the factors that the Phase 6 OPL microprocessor controller (computer) uses when programmed in the Automatic Drying Cycle (Mode) **(Patent No. 4,827,627)**. This factor pertains to the thermal characteristics of each model dryer. In this Slope Program the Phase 6 OPL microprocessor controller (computer) monitors how long it takes for the dryer to get to the selected temperature. The range of adjustment of this slope factor is 1 through 9 in increments of one (1).

   1) This slope factor has been programmed by the factory as outlined on **page 51 and page 52** and **SHOULD NOT BE CHANGED** unless the Phase 6 OPL microprocessor controller (computer) should fail and is being replaced. The replacement Phase 6 OPL microprocessor controller (computer) **MUST BE PROGRAMMED** for the particular dryer model and heating unit as shown in the "A" and "B" Factor table on **page 56** of this manual.

f. Factor "b" (Heat Loss [offset] Program) - this parameter (program) is one of the factors that the Phase 6 OPL microprocessor controller (computer) uses when programmed in the Automatic Drying Cycle (Mode) **(Patent No. 4,827,627)**. This factor also pertains to the thermal characteristics of each model dryer. This factor setting is dependent upon the model dryer and the type of heating unit. The range of adjustment of this slope factor is 1 through 99 in increments of one (1).

   1) This factor (Factor "b") has been programmed by the factory as outlined on **page 51 and page 52** and **SHOULD NOT BE CHANGED** unless the Phase 6 OPL microprocessor controller (computer) should fail and is being replaced. The replacement Phase 6 OPL microprocessor controller (computer) **MUST BE PROGRAMMED** for the particular dryer model and heating unit as shown in the "A" and "B" Factor table on **page 56** of this manual.

2. Program Location 5 (Key "5")

   a. Flash Display Status - this parameter (program) allows for the light emitting diode (L.E.D.) display to read ONLY the Cycle In Progress or ONLY the Basket (tumbler) Temperature, while a cycle is in progress. This is referred to as No Flash (N FLASH). When this parameter is set to Flash (FLASH), the L.E.D. display will flash (alternate) back and forth between the Cycle In Progress and the Temperature.

3. Program Location 8 (Key "8")

   a. Cool Down Time - this parameter (program) affects ONLY the Automatic Drying Cycle **(Patent No. 4,827,627)** when the manually loaded cycle is selected. This Auto Cool Down Time is programmable from 0 to 99 minutes in one-minute increments.

   b. Cool Down Temperature - this parameter (program) affects ONLY the Automatic Drying Cycle **(Patent No. 4,827,627)** when the manually loaded cycle is selected. The Cool Down Temperature is programmable from 70º F to 100º F in one-degree increments from 20º C to 37º C in one-degree increments.

c. Spin Time - this parameter (program) is fixed at 3 minutes in Forward 2 minutes in Reverse the Automatic Mode and programmable in the Manual Mode. This Spin Time is programmable (in the manually loaded cycle ONLY) from 30-seconds to 120-seconds in one-second increments.

d. Dwell (Stop) Time - this parameter (program) is fixed at 5-seconds in the Automatic Mode and programmable in the Manual Mode. This Dwell (Stop) Time is programmable (in the manually loaded cycle ONLY) from 5-seconds to 10-seconds in one-second increments.

e. Buz (Tone) Time - this parameter allows the operator to adjust the time the signal tone sounds from 0 to 15-seconds in one-second increments. This parameter (program) affects the tone at the end of the drying cycle and cooling cycle, as well as, at the end of the Guard On Time when the Anti-Wrinkle Program is active.

4. Program Location 0 (Key “0”)

a. Lint Count - this feature is preset for dryer model and or application. The register sets the maximum amount of cycles it will run before being locked out (out of service). The range for lint count is from 0 to 10.

b. Anti-Wrinkle Program Activation - this parameter (program controls whether or not the Anti-Wrinkle Program will be active (on) for manually loaded cycles ONLY.

c. Buz Time (Anti-Wrinkle Tone) - when the Anti-Wrinkle Program is active, this parameter (program) allows the operator the option to have the tone (buzzer) sound at the end of each Anti-Wrinkle On Time cycle. The buz (tone) time is programmable from 0 to 15-seconds in one-second increments (refer to Program Location 8 [Key “8”]).

d. Anti-Wrinkle On Time - this parameter (program) controls the amount of time that the basket (tumbler) will turn (spin/rotate) without heat when the Anti-Wrinkle Program is active. The Anti-Wrinkle On Time is programmable from 10-seconds to 60-seconds in one-second increments.

e. Anti-Wrinkle Delay Time - when the Anti-Wrinkle Program is active, this parameter (program) controls the Dwell (Stop) and activation of the Anti-Wrinkle On Time. The Anti-Wrinkle Delay Time is programmable from 10-seconds to 255-seconds in one-second increments.

f. Maximum Guard On Time - this parameter (program) controls the maximum time that the Anti-Wrinkle Program will be in progress. The Maximum Guard On Time is programmable from 1 minute to 99 minutes in one-minute increments.

# SECTION IV

## OPERATING INSTRUCTIONS

The Phase 6 OPL microprocessor controller (computer) allows the operator to choose from six (6) preprogrammed cycles (Key "A" through Key "F") which, unless otherwise specified at the time of ordering the dryer, has been preprogrammed by the factory with the parameters (programs) shown on **page 51** and **page 52**. Additionally, for occasional or one-time special loads, the manually loaded cycles can be used where the operator must set the specific program(s) needed.

**NOTE:** Refer to **Section III** of this manual for a complete explanation of the various cycles/selections available.

After the load is put into the basket (tumbler) and the main door is closed, determine which cycle will suit the application (type of load). We recommend using the Automatic Drying Cycle **(Patent No. 4,827,627)** for most loads. This cycle provides for the best drying in the shortest time, **ALL** automatically.

## A. OPERATING SEQUENCE

1. Preprogrammed Cycles

   a. Automatic Drying Cycle **(Patent No. 4,827,627)**

      1) Light emitting diode (L.E.D.) display reads "REAdY" (no cycle in progress).

      2) Press the letter on the keyboard (touch pad) corresponding to the cycle desired (i.e., Key "A").

         a) The dryer will then start (rotate).

      3) L.E.D. display reads dRYING AUTO CYCLEA, ELAPSE TIME__MIN. During the drying cycle, the Phase 6 OPL microprocessor controller (computer) is monitoring the amount of moisture in the load. Approximately half way through the drying cycle, the Cycle Status portion of the L.E.D. will display (i.e. dRY LEVEL 68 PcT). The display will change and count upward until the percentage of extraction programmed is reached.

**NOTE:** To stop the dryer at any time, open the main door. To continue the cycle, close the main door, the Phase 6 OPL microprocessor controller (computer) prompts the operator "PRESS START" then press the "ENTER/START" I Key. The dryer will continue from where it left off, or ... the dryer may also be stopped by pressing the "CLEAR/STOP" O Key. However, the cycle that was in progress **will be cancelled**, and the L.E.D. display will return to the "REAdY" (no cycle in progress) Mode.

4) Once the preprogrammed percentage of extraction (dryness level) is reached, the drying cycle will end, and the Cycle In Progress portion of the light emitting diode (L.E.D.) display will read COOL 06 MIN REMAIN and will also display the dRUM TEMP___F. (FLASH [PL5] **must be** active for the "dRUM TEMP" to display. If NFLASH is active then press "ENTER/START" ⊡ Key to display "dRUM TEMP.")

5) Once the Cool Down Cycle is completed, the dryer will shut off, the tone (buzzer) will sound (i.e., 7-seconds), and the L.E.D. display will read "dONE." The L.E.D. display will continue to read "dONE" until the main door is opened.

6) If the Anti-Wrinkle Program is active (on), once the drying cycle and cooling cycles are completed and the L.E.D. display reads "dONE" the Phase 6 OPL microprocessor controller (computer) will proceed into the Anti-Wrinkle Program, L.E.D. displays "START GUARd." If the main door <u>is</u> <u>not</u> open within the Anti-Wrinkle Delay Time (i.e., 90-seconds), the basket (tumbler) will rotate (without heat) for the programmed Anti-Wrinkle On Time (i.e., 20-seconds). The Phase 6 OPL microprocessor controller (computer) will repeat this process until the programmed Maximum Anti-Wrinkle On Time has expired (i.e., 10 minutes) or until the main door is opened, whichever comes first. The L.E.D. display will continue to read "dONE" until either the main door is opened or the Maximum Anti-Wrinkle On Time has expired, at which time the L.E.D. display will read "dONE" until the main door is opened.

b. <u>Timed (Manual) Drying Cycle</u>

1) L.E.D. display reads "REAdY" (no cycle in progress).

2) Press the letter on the keyboard (touch pad) corresponding to the cycle desired (i.e., Key "D").

3) The dryer will then start (rotate).

4) The L.E.D. display will read CYCLEd, __MIN REMAIN, dRUM TEMP___F. (FLASH [PL 5] **must be** active for the "dRUM TEMP" to display. If NFLASH is active then press "ENTER/START" ⊡ Key to display "dRUM TEMP.")

**NOTE:** To stop the dryer at any time, open the main door. To continue the cycle, close the main door, the Phase 6 OPL microprocessor controller (computer) prompts the operator to "PRESS START" then press the "ENTER/START" ⊡ Key. The dryer will continue from where it left off, or ... the dryer may also be stopped by pressing the "CLEAR/STOP" ⊡ Key. However, the cycle that was in progress **<u>will be cancelled</u>**, and the L.E.D. display will return to the "REAdY" (no cycle in progress) Mode.

5) When the programmed drying time has expired, the Phase 6 OPL microprocessor controller (computer) will proceed into the Cool Down Cycle (Mode), and the Cycle In Progress portion of the L.E.D. display will read COOL 06 MIN REMAIN and also display dRUM TEMP___F. (FLASH [PL5] **must be** active for the "dRUM TEMP" to display. If NFLASH is active then press "ENTER/START" ⊡ Key to display "dRUM TEMP.")

6) Once the Cool Down Cycle is completed, the dryer will shut off, and the L.E.D. display will read "dONE." The L.E.D. display will continue to read "dONE" until the main door is opened.

7) If the Anti-Wrinkle Program is active (on), once the drying cycle and cooling cycles are completed and the light emitting diode (L.E.D) display reads "dONE," the Phase 6 OPL microprocessor controller (computer) will proceed into the Anti-Wrinkle Program, L.E.D. displays "START GUARd." If the main door is not opened within the Anti-Wrinkle Delay Time (i.e., 90-seconds), the basket (tumbler) will rotate (without heat) for the programmed Anti-Wrinkle On Time (i.e., 20-seconds). The Phase 6 OPL microprocessor controller (computer) will repeat this process until the programmed Maximum Anti-Wrinkle On Time has expired (i.e., 10 minutes). The L.E.D. display will read "dONE," until the main door is opened.

2. Manually Loaded Cycles

a. Automatic Drying Cycle **(Patent No. 4,827,627)**

1) L.E.D. display reads "REAdY" (no cycle in progress).

2) Press Auto Key.

3) L.E.D. display will now read dRY TEM PF___ Fabric (temperature) desired. Enter the temperature desired (from 160º F to 200º F in one-degree increments or from 71º C to 93º C in one-degree increments). For example, for F180, press Key "1," Key "8," Key "0," and then press the "ENTER/START" I Key.

4) L.E.D. display will now read dRY LEVEL___ enter the percentage of extraction (dryness level desired) (from 90% to 100% in one-percent increments). For example, for 95%, press Key "9," Key "5," and then press the "ENTER/START" I Key.

5) For optional reversing models, if the system parameters are set for Select Reverse, the L.E.D. display will now read "SEL REV" meaning "Select Reverse." If reversing basket (tumbler) action is desired, press the "ENTER/START" I Key. If No Reverse is desired, press the "0" Key.

6) The dryer will now display "PRESS START" press the "ENTER/START" I Key to start the dryer. The L.E.D. display will read dRYING AUTO CYCLE, ELAPSE TIME__MIN, dRUM TEMP___F. (FLASH [PL5] **must be** active for the "dRUM TEMP" to display. If NFLASH is active then press "ENTER/START" I Key to display "dRUM TEMP.") During the Drying Cycle, the Phase 6 OPL microprocessor controller (computer) in monitoring the moisture in the load. Approximately half way through the drying cycle, the Cycle Status portion of the L.E.D. will display (i.e. dRY LEVEL 68PcT). The display will change and count upward until the percentage of extraction programmed is reached.

**NOTE:** To stop the dryer at any time, open the main door. To continue the cycle, close the main door, the Phase 6 OPL microprocessor controller (computer) prompts the operator "PRESS START" then press the "ENTER/START" I Key. The dryer will continue from where it left off, or ... the dryer may also be stopped by pressing the "CLEAR/STOP" O Key. However, the cycle that was in progress **will be cancelled**, and the L.E.D. display will return to the "REAdY" (no cycle in progress) Mode.

7) Once the preprogrammed percentage of extraction (dryness level) is reached, the drying cycle will end, and the Cycle In Progress portion of the light emitting diode (L.E.D.) display will read COOL 06 MIN REMAIN and dRUM TEMP___F. (FLASH [PL5] **must be** active for the "dRUM TEMP" to display. If NFLASH is active then press "ENTER/START" I Key to display "dRUM TEMP.")

8) Once the Cool Down Cycle is completed, the dryer will shut off, the tone (buzzer) will sound (i.e., 7-seconds), and the L.E.D. display will read "dONE." The L.E.D. display will continue to read "dONE" until the main door is opened.

9) If the Anti-Wrinkle Program is active (on), once the drying cycle and cooling cycles are completed and the L.E.D. display reads "dONE" the Phase 6 OPL microprocessor controller (computer) will proceed into the Anti-Wrinkle Program, L.E.D. displays "START GUARd." If the main door <u>is</u> <u>not</u> open within the Anti-Wrinkle Delay Time (i.e., 90-seconds), the basket (tumbler) will rotate (without heat) for the programmed Anti-Wrinkle On Time (i.e., 20-seconds). The Phase 6 OPL microprocessor controller (computer) will repeat this process until the programmed Maximum Anti-Wrinkle On Time has expired (i.e., 10 minutes). The L.E.D. display will read "dONE" until the main door is opened.

b. <u>Timed (Manual) Dryer Cycle</u>

1) L.E.D. display reads "REAdY" (no cycle in progress).

2) Press Key MANUAL

3) L.E.D. display will now read "dRY TIME 00M." Enter the drying time desired (from 0 to 99 minutes in one-minute increments). For example, for 40 minutes, press Key "4," Key "0," and then press the "ENTER/START" I Key.

4) L.E.D. display will now read "COOL TIME 00M." Enter cool time desired (from 0 to 99 minutes in one-minute increments). For example, for 10 minutes, press Key "1," Key "0," and then press the "ENTER/START" I Key.

5) L.E.D. display will now read "dRY TEMP F" meaning select Fabric (temperature) desired. Enter the temperature desired (from 100º F to 200º F in one-degree increments or from 37º C to 93º C in one-degree increments). For example, for F182, press Key "1," Key "8," Key "2," and then press the "ENTER/START" I Key.

6) For optional reversing models, if the system parameters are set for Select Reverse, the L.E.D. display will now read "SEL REV" meaning "Select Reverse." If reversing basket (tumbler) action is desired, press the "ENTER/START" I Key. If No Reverse is desired, press the "0" Key.

7) The dryer will now display "PRESS START" press the "ENTER/START" I Key to start the dryer. The L.E.D. display will read dRYING MANUAL CYCLE, ___MIN REMAIN, dRUM TEMP___F. (FLASH [PL5] **must be** active for "dRUM TEMP" to display. If NFLASH is active then press "ENTER/START" I Key to display "dRUM TEMP.")

**NOTE:** To stop the dryer at any time, open the main door. To continue the cycle, close the main door, the Phase 6 OPL microprocessor controller (computer) prompts the operator "PRESS START" then press the "ENTER/START" ⊡ Key. The dryer will continue from where it left off, or ... the dryer may also be stopped by pressing the "CLEAR/STOP" ⊡ Key. However, the cycle that was in progress **will be cancelled**, and the light emitting diode (L.E.D.) display will return to the "REAdY" (no cycle in progress) Mode.

8) Once the programmed drying time has expired, the Phase 6 OPL microprocessor controller (computer) will proceed into the Cool Down Cycle (Mode) and the Cycle In Progress portion of the L.E.D. display will read COOL___MIN REMAIN and dRUM TEMP___F. (FLASH [PL5] **must be** active for the "dRUM TEMP" to display. If "N FLASH" is active then press "ENTER/START" ⊡ Key to display "dRUM TEMP.")

9) Once the Cool Down Cycle is completed, the dryer will shut off, the tone (buzzer) will sound (i.e., 7-seconds), and the L.E.D. display will read "dONE." The L.E.D. display will continue to read "dONE" until the main door is opened.

10) If the Anti-Wrinkle Program is active (on), once the drying cycle and cooling cycles are completed and the L.E.D. display reads "dONE" the Phase 6 OPL microprocessor controller (computer) will proceed into the Anti-Wrinkle Program, L.E.D. displays "START GUARd." If the main door is not open within the Anti-Wrinkle Delay Time (i.e., 90-seconds), the basket (tumbler) will rotate (without heat) for the programmed Anti-Wrinkle On Time (i.e., 20-seconds). The Phase 6 OPL microprocessor controller (computer) will repeat this process until the programmed Maximum Anti-Wrinkle On Time has expired (i.e., 10 minutes). The L.E.D. display will read "dONE" until the main door is opened.

## B. OPERATING NOTES

1. If the main door is opened while a cycle is in progress the L.E.D. display will read "MAIN dOOR." The L.E.D. display will continue to read "MAIN dOOR" until the main door is closed. Once the main door is closed, the L.E.D. display will read "PRESS START." The "ENTER/START" ⊡ Key **must now be** pressed to resume the drying cycle and cooling cycle.

2. If the system parameters [PL 5] is not programmed for "FLASH" the "dRUM TEMP" L.E.D. is displayed by pressing the "ENTER/START" ⊡ Key.

3. Preprogrammed Cycle "F" has been programmed by the factory as a "Touch-Up Cycle" (unless otherwise specified at the time of ordering the dryer). This Touch-Up Cycle is programmed to operate in the timed (Manual) Drying Cycle for 10 minutes of drying time at 170º F and a 2 minute cool down.

4. A cycle in progress can be stopped and **cancelled** at any time by pressing the "CLEAR/STOP" ⊡ Key. The L.E.D. display will return to the "REAdY" Mode (no cycle in progress).

5. When using the manual selection cycle, if an error is made making an entry, press the "CLEAR/STOP" ⊡ Key **ONCE**, and the entry **will be cancelled**. Re-enter the selection.

# SECTION V

## L.E.D. DISPLAY/CODES

The light emitting diode (L.E.D.) display informs the operator of cycle status, program verification, and displays important diagnostic codes and fault codes.

## A. L.E.D. DISPLAY OPERATING STATUS

1. Cycles in Progress

   a. While the dryer is operating, the L.E.D. display will read which cycle is in progress. For example, in Drying Cycle (Mode), the L.E.D. display will read "dRYING" and in the Cool Down Cycle (Mode) the L.E.D. display will read "COOL."

2. Cycle Status

   a. While a cycle is in progress, the L.E.D. display will show the progress of the cycle (load) that is being processed.

      1) Automatic Drying Cycle

         a) While a cycle is in progress the cycle status, elapse time and dRUM TEMP will be displayed with [PL5] FLASH active (NFLASH active the "ENTER/START" Key **must be** pressed to display dRUM TEMP). Approximately half way through the drying cycle, the cycle status portion of the L.E.D. will display (i.e. dRY LEVEL 68 PcT). The display will change and count upward until the percentage of extraction programmed is reached.

      2) Timed (Manual) Drying Cycle

         a) While a cycle is in progress the cycle status, time remaining and dRUM TEMP will be displayed with [PL5] FLASH active (NFLASH active the "ENTER/START" Key **must be** pressed to display dRUM TEMP).

3. Alternate Display Programs

   a. Programming allows for the L.E.D. display to read just the basket (tumbler) temperature or flash back and forth from Cycle in Progress or Basket (tumbler) Temperature while the dryer cycle is in progress. Unless otherwise specified at the time of ordering the dryer, the Phase 6 OPL microprocessor controller (computer) is programmed not to flash and to read the Cycle in Progress.

**NOTE:** Refer to the illustration on the following page for details.

4. Indicator Dots (refer to **page 23**)

   a. Located at the top of the L.E.D. display is a series of dots which indicate the various Phase 6 OPL microprocessor controller (computer) output functions while a cycle is in progress.

1) Illustration No. 1

a) **FORWARD INDICATOR -** this indicator dot is functional for dryer models with the Reversing Action Option ONLY. This indicator dot will be on when the basket (tumbler) is in the forward (clockwise [CW]) direction. Additionally, when the Anti-Wrinkle Program is active, this indicator dot will be on whenever the Phase 6 OPL microprocessor controller (computer) is in the Guard On Time Program (Mode).

2) Illustration No. 2 (refer to **illustration below**)

a) **REVERSING INDICATOR -** this indicator dot is functional for dryer models with the Reversing Action Option ONLY. This indicator dot will be on when the basket (tumbler) is in the reverse (counterclockwise [CCW]) direction.

3) Illustration No. 3 (refer to **illustration below**)

a) **HEAT INDICATOR -** this indicator dot is on whenever the Phase 6 OPL microprocessor controller (computer) is calling for the heating unit to be active (on).

4) Illustration No. 4 (refer to **illustration below**)

a) **ON INDICATOR -** this indicator dot is on whenever a cycle is in progress. Additionally, when the Anti-Wrinkle Program is active, this indicator dot will be on whenever the Phase 6 OPL microprocessor controller (computer) is in the Guard On Time Program.

5) Illustration No. 5 (refer to **illustration below**) *OPTIONAL*

a) **AIR JET CIRCUIT INDICATOR -** this indicator dot is on at the end of the drying cycle for approximately 60-seconds.

## B. PHASE 6 OPL MICROPROCESSOR L.E.D. DISPLAYS

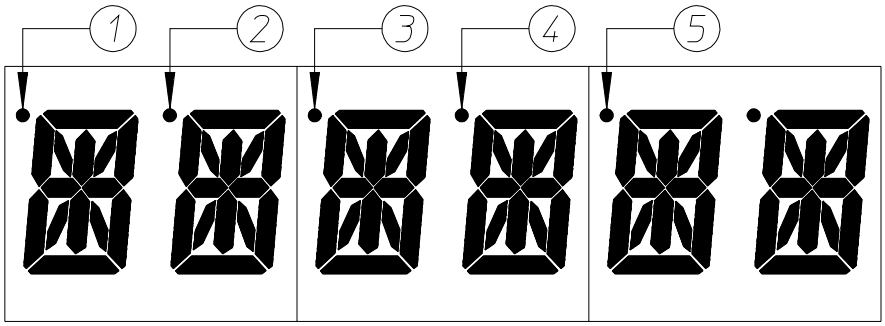


MAN3450

1. Basket (tumbler) in **FORWARD MODE** (clockwise [CW]) **INDICATOR**
2. Basket (tumbler) in **REVERSE MODE** (counterclockwise [CCW]) **INDICATOR**
3. **HEAT ON INDICATOR**
4. **ON INDICATOR** (dryer is in operation mode)
5. **AIR JET INDICATOR -** *OPTIONAL*

# C. L.E.D. CODES

## 1. Display Codes

| | |
|---|---|
| A | SLOPE FACTOR |
| ALL REV | ALWAYS REVERSING |
| ANTI WRINKL dELAY TIME | ANTI-WRINKLE DELAY TIME |
| ANTI WRINKL GUARd ACTIVE | ANTI-WRINKLE PROGRAM ACTIVE |
| ANTI WRINKL GUARd ON TIME | ANTI-WRINKLE GUARD ON TIME |
| AUTO CYCLE | AUTOMATIC MODE |
| b | HEAT LOSS (OFF SET) FACTOR |
| bURNER CONTROL FAIL | GAS ONLY ... POWER (24 VAC) IS NOT EVIDENT AT GAS VALVE |
| bURNER FLAME FAIL | NO BURNER FLAME SENSED |
| bURNER SAFETY FAIL | GAS/ELECTRIC ONLY ... BURNER/OVEN OPEN HI-LIMIT CIRCUIT |
| bUZZ | BUZZER (TONE) |
| bUZZ TIME | BUZ TIME |
| ºCEL | DEGREE IN CELSIUS |
| CHECK MAIN FUSE | MAIN FUSE FAILURE |
| CLEAN LINT | PROMPT TO CLEAN LINT SCREEN, DRYER CYCLE LOCK-OUT |
| COOL | COOL DOWN CYCLE IN PROGRESS |
| COOL TIME__M | COOL DOWN TIME |
| COOL TEMP___ | COOL DOWN TEMPERATURE |
| CYCLEA | PREPROGRAMMED CYCLE A |
| CYCLEb | PREPROGRAMMED CYCLE B |
| CYCLEC | PREPROGRAMMED CYCLE C |
| CYCLEd | PREPROGRAMMED CYCLE D |
| CYCLEE | PREPROGRAMMED CYCLE E |
| CYCLEF | PREPROGRAMMED CYCLE F |
| dONE | DRYING or COOLING CYCLE COMPLETE OR DRYER IN ANTI-WRINKLE MODE |
| dRYING | DRYING CYCLE IN PROGRESS |
| dRY LEVEL___ | DRYNESS LEVEL (PERCENTAGE OF EXTRACTION) (NUMERICAL VALUE) |
| dRY TEMP F___ | DRYING TEMPERATURE |
| dRY TIME__M | LENGTH OF DRYING CYCLE |
| dRUM SAFETY FAIL | TUMBLER HI-LIMIT CIRCUIT IS OPEN |
| ELAPSE TIME___MIN | CYCLE DISPLAY TIME |
| ELECTRIC | SPECIFIC HEAT TYPE OF DRYER ... ELECTRICALLY HEATED |
| F | FABRIC TEMPERATURE |
| ºFAR | DEGREE IN FAHRENHEIT |
| FLASH | FLASH DISPLAY ACTIVE |
| GAS | SPECIFIC HEAT TYPE OF DRYER ... GAS HEATED |
| HOT | INDICATES AN OVERHEAT CONDITION |
| LINT dOOR | LINT DRAWER/DOOR CIRCUIT IS OPEN OR FAULT IN THE A.C. SWITCH CIRCUIT |
| LINT COUNT | DRYING CYCLES RANGE FROM 1-10 CYCLES BEFORE CLEAN LINT DISPLAY |
| __M REMAIN | CYCLE DISPLAY TIME |
| MAIN dOOR | DOOR CIRCUIT IS OPEN OR FAULT IN THE A.C. DOOR SWITCH CIRCUIT |
| MANUAL CYCLE | MANUAL MODE |
| MAX ANTI WRINKL GUARd | MAXIMUM GUARD TIME |
| NFLASH | FLASH DISPLAY NOT ACTIVE |
| NoAIRFLOW | SAIL SWITCH OPEN |
| NoANTI WRINKL GUARd | ANTI-WRINKLE PROGRAM IS NOT ACTIVE |
| NoBUZZ | NO BUZZER (TONE) |
| NoHEAT | GAS ONLY ... IGNITION ATTEMPT FAILURE |
| NoREV | NO REVERSE |
| No ROTATE SENSOR | NO ROTATIONAL SENSOR SELECTED |
| PROGRM | PROGRAM MODE |
| REAdY | NO CYCLE IN PROGRESS |
| ROTATE SENSOR ACTIVE | ROTATIONAL SENSOR SELECTED |
| ROTATE SENSOR FAIL | ROTATIONAL SENSOR CIRCUIT FAILURE |
| __RPM | MONITORS TUMBLER RPM WITH ROTATIONAL SENSOR CIRCUIT ACTIVE |
| SAIL SWITCH FAIL | GAS/ELECTRIC ONLY. ATTEMPT MADE TO START DRYER WITH SAIL SWITCH DISABLED IN CLOSED POSITION |
| SELREV | SELECT REVERSE |
| SPIN TIME | SPIN TIME |
| START GUARd | START ANTI WRINKLE GUARD CYCLE |
| STEAM | SPECIFIC HEAT TYPE OF DRYER ... STEAM HEATED |
| STOP TIME | STOP TIME |
| TEMP SENSOR FAIL CHECK TEMP SENSOR FUSE | FAULT IN M.P. HEAT SENSING CIRCUIT |

2. Fault Codes

**bURNER CONTROL FAIL**
- GAS MODELS ONLY ... POWER (24 VAC) is NOT EVIDENT at GAS VALVE

**bURNER FLAME FAIL**
- the Phase 6 Microprocessor Controller (computer) **DOES NOT** SENSE FLAME VERIFICATION (GAS MODELS ONLY)

**bURNER SAFETY FAIL**
- GAS/ELECTRIC ONLY ... BURNER/OVEN OPEN HI-LIMIT CIRCUIT

**dRUM SAFETY FAIL**
- **fault** in the TUMBLER HI-LIMIT CIRCUIT

**HOT**
- indicates an OVERHEAT CONDITION

**LINT dOOR**
- when the LINT DOOR or LINT DRAWER is open or there is a **fault** in the LINT DOOR/DRAWER CIRCUIT

**MAIN dOOR**
- when the MAIN DOOR is open or there is a **fault** in the DOOR CIRCUIT

**No AIRFLOW**
- **fault** in the SAIL SWITCH CIRCUIT (GAS/ELECTRIC MODELS ONLY)

**No HEAT**
- GAS ONLY ... IGNITION ATTEMPT FAILURE

**ROTATE SENSOR FAIL**
- **fault** in the ROTATION SENSOR CIRCUIT

**SAIL SWITCH FAIL**
- **fault** in the SAIL SWITCH CIRCUIT (GAS/ELECTRIC MODELS ONLY)

**TEMP SENSOR CHECK TEMP SENSOR FUSE**
- **fault** in the MICROPROCESSOR TEMPERATURE SENSOR CIRCUIT

# SECTION VI

## PROGRAMMING INSTRUCTIONS

### A. INTRODUCTION TO PROGRAMMING

The various program selections are stored in the Phase 6 OPL microprocessor controller (computer) and are broken down into two (2) categories:

1. Preprogrammed Cycles (Key "A" through Key "F")

   a. Allow the operator to have six (6) most commonly used cycle selections awaiting the push of a single keyboard (touch pad) entry to start the dryer.

2. System Parameters

   a. Which are the programs set by the factory and rarely need to be changed in the field. These system parameters (programs) are stored in the memory as Program Locations (Key "2," Key "5," Key "8," and Key "0").

Both the preprogrammed cycles and the system parameters (programs) have been preprogrammed by the factory with the parameters shown on **page 51 and page 52** of this manual. The various program selections for the preprogrammed cycles and system parameters are outlined in **Section III** of this manual.

**ALL** the program changes for the preprogrammed cycles and system parameters (programs) are done through the keyboard (touch pad) selection keys on the front of the control panel. To change programs, an access code **must be** entered. The procedure for entering this access code as follows:

First, make sure that no cycle is in progress and that the light emitting diode (L.E.D.) display reads "REAdY." **Then press the "ENTER/START" ⊡ Key ONCE and the "0" Key three (3) times. The "0" Key *must be* pressed three (3) times within 2-seconds after pressing the "ENTER/START" ⊡ Key. If this access sequence is not entered correctly, the Phase 6 OPL microprocessor controller (computer) will deny access into the Program Mode**. If the access code is entered correctly, the L.E.D. display will read "PROGRM." From this point, any of the preprogrammed cycles or system parameters (programs) can be accessed.

To alter the programming the operator will locate the parameter (program) that is to be changed. If the change is a numerical one (i.e., time and/or temperature), the operator will simply enter the numerical value desired. If an error is made, press the "CLEAR/STOP" ⊡ Key **ONCE**, and the incorrect entry that was made **will be cancelled**. Once the entry is made, or the parameter (program) set does not need to be changed, press the "ENTER/START" ⊡ Key, and the Phase 6 OPL microprocessor controller (computer) will advance to the next program selected.

If the parameter (program) change is a status change, such as changing the temperature conversion from degree Fahrenheit (ºF) to degree Celsius (ºC) or from "AUTO" (Automatic Drying Cycle - **Patent No. (4,827,627**) to "MANUAL" (Timed [Manual] Drying Cycle), the operator will press the "0" Key **ONCE**. The "0" Key acts as a flip-flop switch to change the programming of a parameter. Once the entry is made, or if the parameter (program) set does not need to be changed, press the "ENTER/START" ⊡ Key, and the Phase 6 OPL microprocessor controller (computer) will advance to the next program selection.

When making numerical changes, please keep in mind to stay within the programming limits shown on **page 53** and **page 54**. If an erroneous entry is made, the Phase 6 OPL microprocessor controller (computer) will ignore the entry made when the "ENTER/START" [I] Key is pressed and will return to the numerical value previously set.

The Phase 6 OPL microprocessor controller (computer) walks the operator through the various parameters (programs) and advances each time the "ENTER/START" [I] Key is pressed. Once **ALL** the steps in the particular preprogrammed cycle or Program Location (system parameters) are set, the light emitting diode (L.E.D.) display will read "PROGRM." At this point, the operator can go to the next preprogrammed cycle or Program Location (system parameter) to be changed. If no other programs (parameters) need to be changed, the user can get out of the program mode by pressing the "CLEAR/STOP" [O] Key. The Phase 6 OPL microprocessor controller (computer) will now return to the operating mode, and the L.E.D. display will read "REAdY."

## B. PROGRAMMING FLOWCHARTS

The following section of this manual (**page 29 through page 50**) explains the programming of the preprogrammed cycles and Program Locations (system parameters) through the use of flowcharts. A flowchart is nothing more than a diagram of the programming process.

Four (4) different symbols will be used in these flowcharts:

a rectangle

a square

ENTER/START CLEAR/STOP

Each rectangle will represent a read-out on the Phase 6 OPL microprocessor controller (computer) L.E.D. display, and each square will represent a key that is pressed. For example:

1. If the flowchart shows the symbol ***REAdY*** the Phase 6 OPL microprocessor controller (computer) L.E.D. display will read the same.
2. If the flowchart shows the symbol [ ] you will press that specific key on the keyboard (touch pad) label.
3. [O] This symbol represents "CLEAR/STOP."
4. [I] This symbol represents "ENTER/START."

   a. The flowchart arrows (i.e., ——▶) represents the program path.

   b. On the sides of these flowcharts are explanations of the flowchart procedure, and in some cases the programming limits.

Listed below, is an index of the flowcharts on the following pages.

## Flowchart Title — Page



**NOTE:** To review the preset Program Locations, simply press Key "8" when the light emitting diode (L.E.D.) display reads "REAdY."

# Entering and Exiting Program Mode

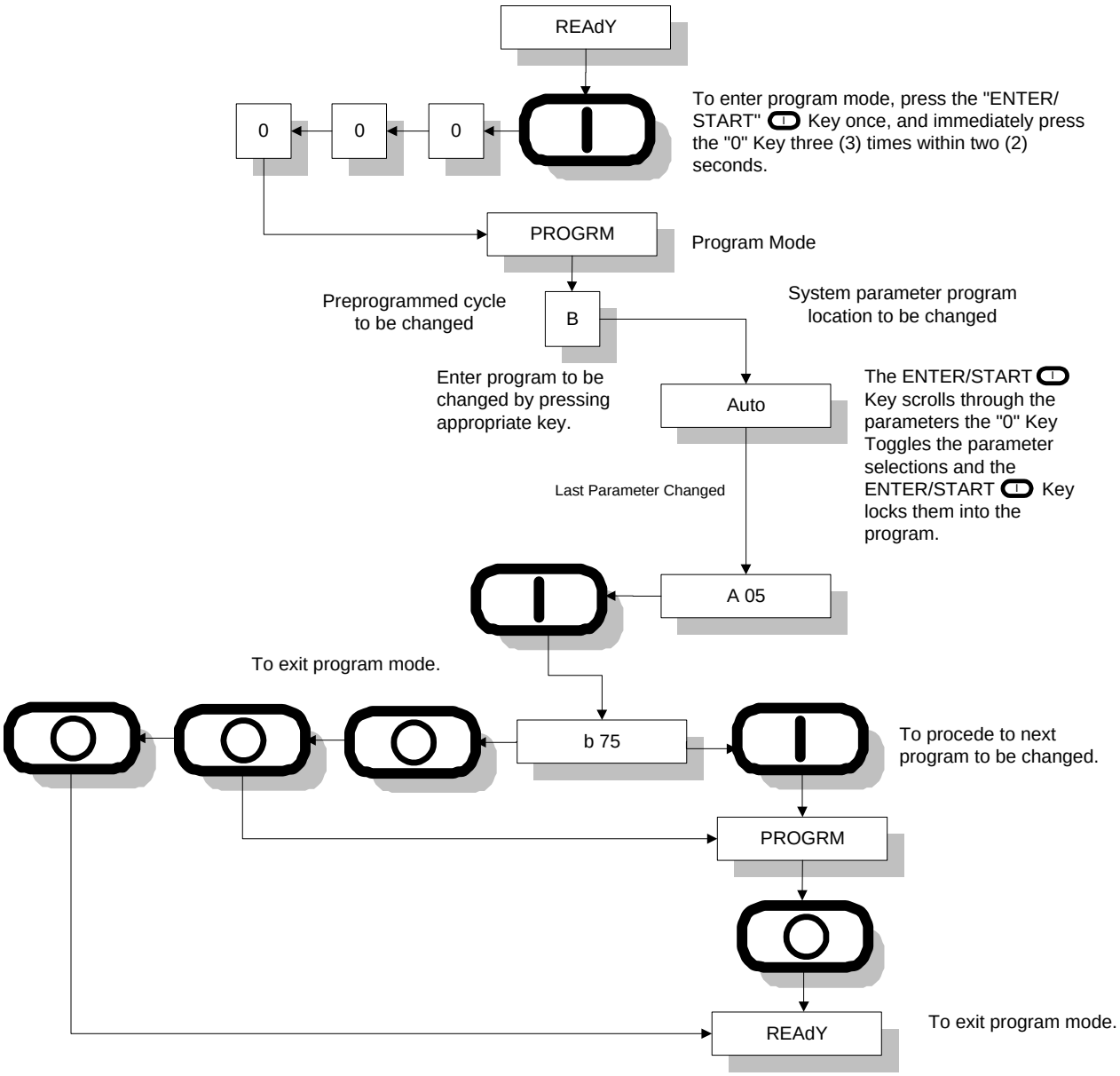

# Preprogrammed Cycle Programming

Automatic Drying Cycle **(Patent No. 4,827,627)**

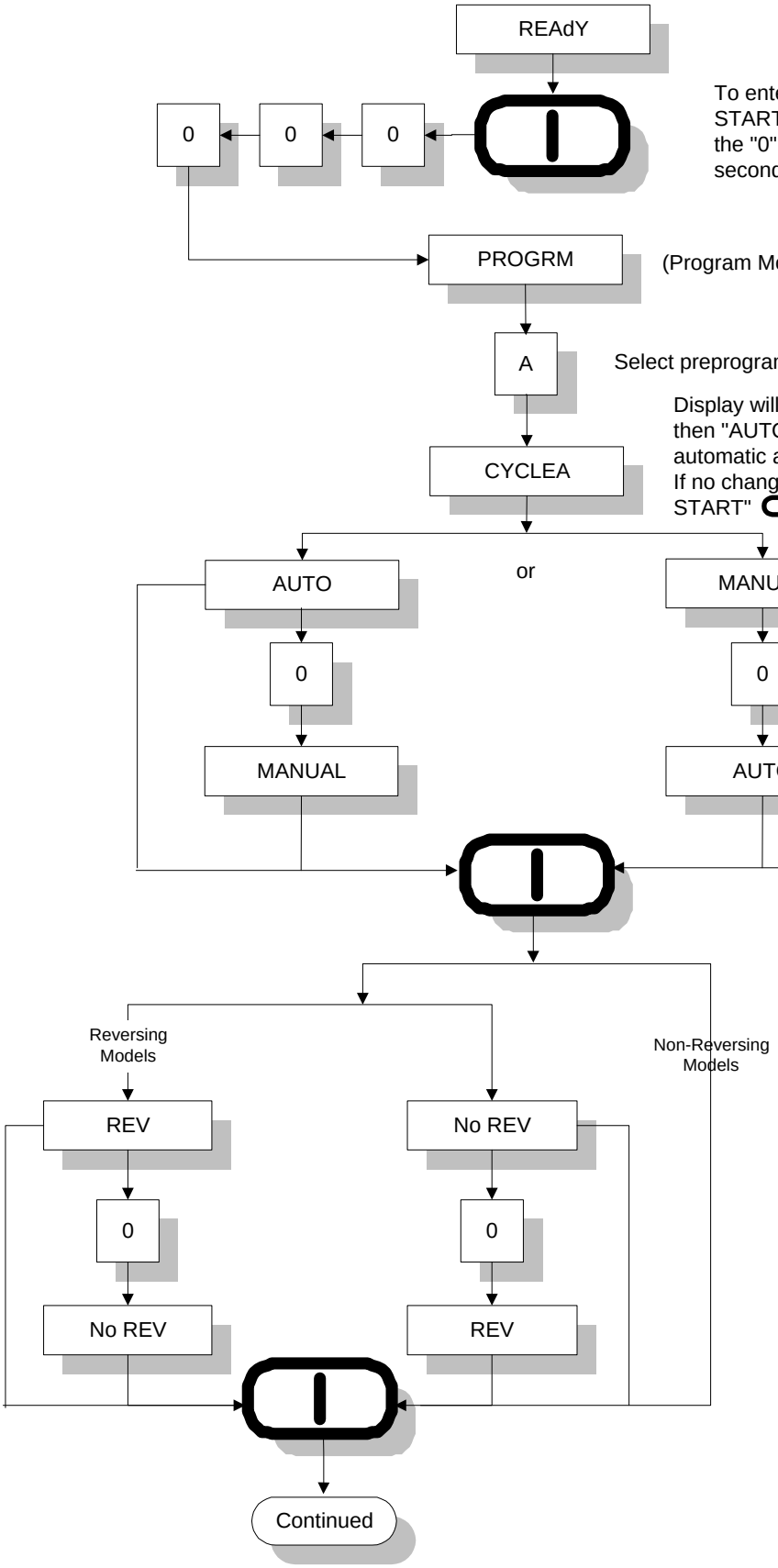


To enter program mode, press the "ENTER/START" Key once, and immediately press the "0" Key three (3) times within two (2) seconds.

Select preprogrammed cycle to be changed (i.e., A).

Display will read "CYCLEA" for 1 second, and then "AUTO" or "MANUAL". Cycle between automatic and manual by pressing the "0" Key. If no change is required press "ENTER/START" Key.

For Non-Reversing models press "ENTER/START" Key.

Reversing Models:

Display will read "REVERSING" or "NON-REVERSING" (single direction rotation). If no change, press "ENTER/START" Key. If a change is necessary, press the "0" Key, and then "ENTER/START" Key.

Display will read "dRY" for 1 second, "TEMP" for 1 second (drying temperature) and then temperature programmed. If a change is necessary, enter temperature change (160º to 200º in increments of 1ºF). I.e., for 182ºF, press Key "1", Key "8", Key "2", and then press "ENTER/START" Key.

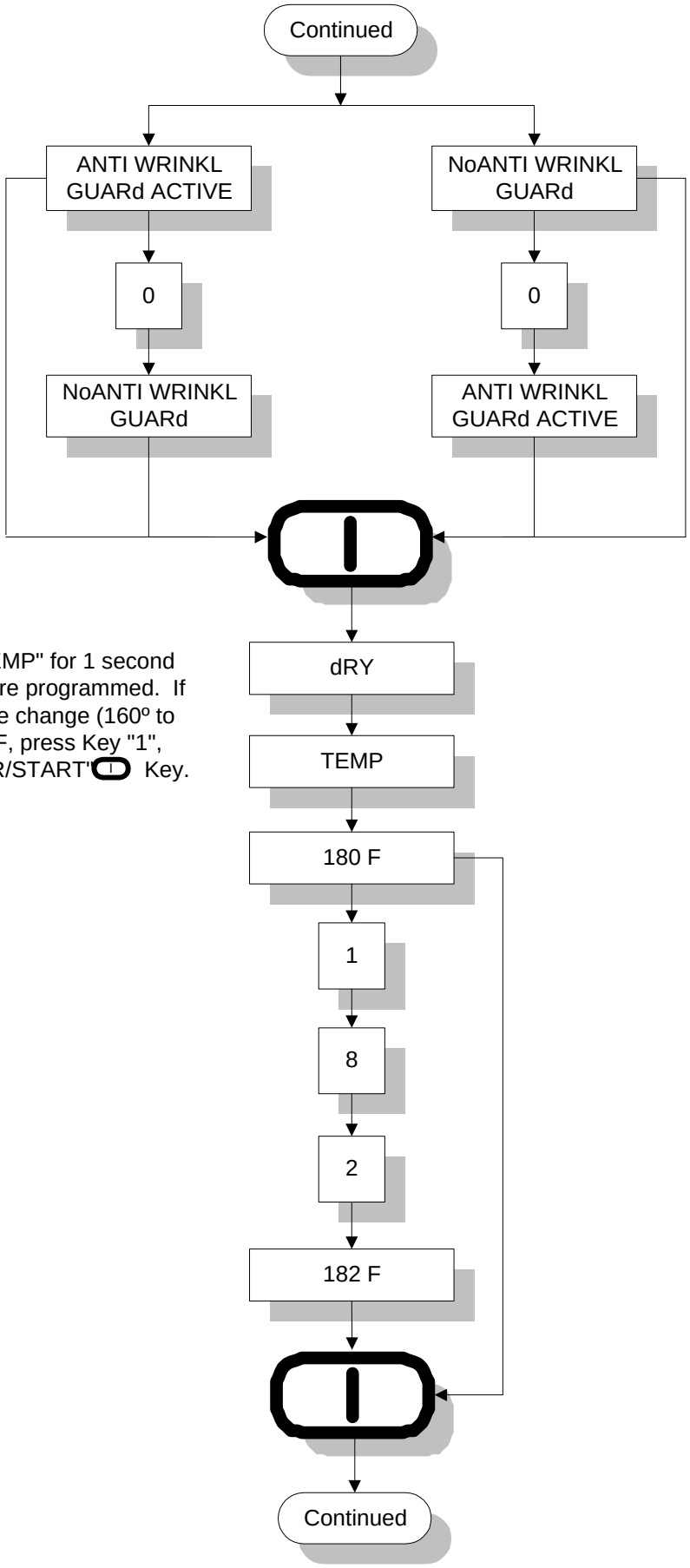

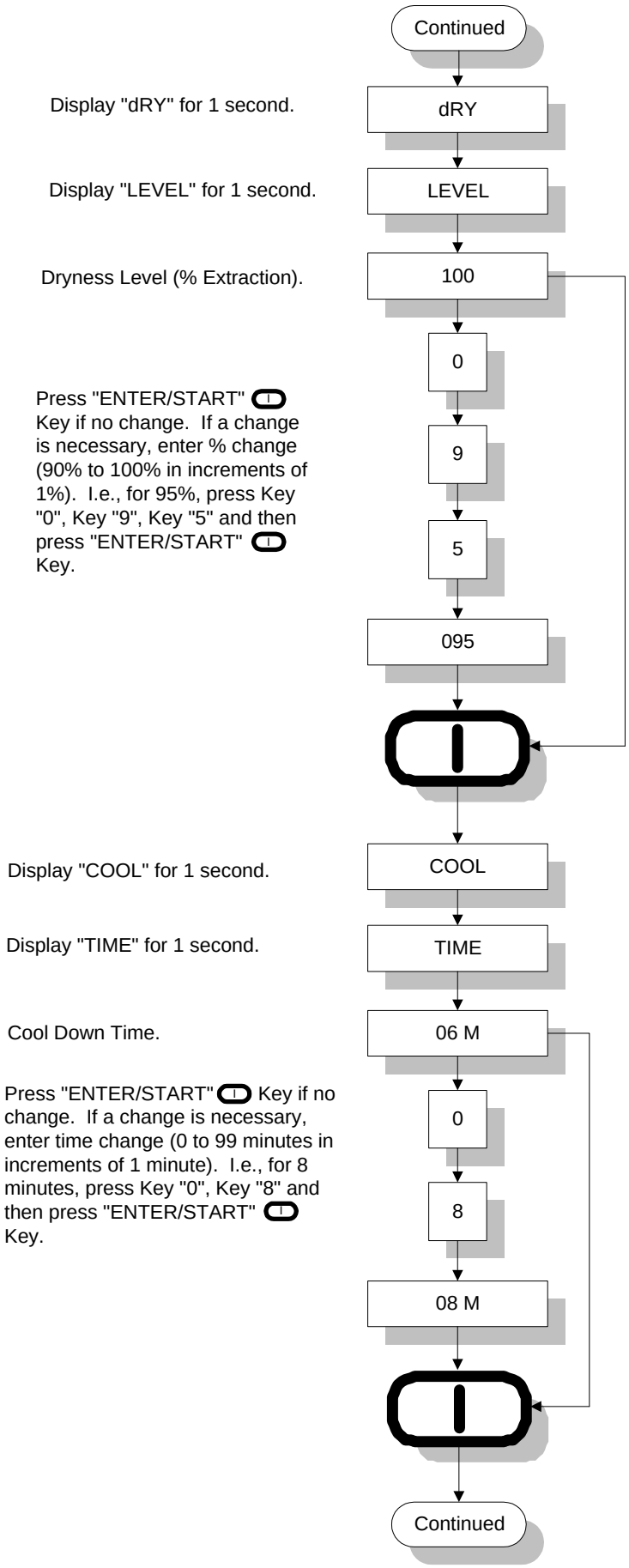
Continued
Display "dRY" for 1 second.
dRY
Display "LEVEL" for 1 second.
LEVEL
Dryness Level (% Extraction).
100
0
Press "ENTER/START" Key if no change. If a change is necessary, enter % change (90% to 100% in increments of 1%). I.e., for 95%, press Key "0", Key "9", Key "5" and then press "ENTER/START" Key.
9
5
095
Display "COOL" for 1 second.
COOL
Display "TIME" for 1 second.
TIME
Cool Down Time.
06 M
Press "ENTER/START" Key if no change. If a change is necessary, enter time change (0 to 99 minutes in increments of 1 minute). I.e., for 8 minutes, press Key "0", Key "8" and then press "ENTER/START" Key.
0
8
08 M
Continued

Display reads "COOL" for 1 second.

Display reads "TEMP" for 1 second.

Press "ENTER/START" if no change.

If a change is necessary, enter temperature change (70º to 100ºF in increments of 1ºF). I.e., for 80ºF, press Key "0", Key "8", Key "0", and then press "ENTER/START" Key.

Slope Factor:
If no change press "ENTER/ START" Key. If a change is necessary enter Factor "A" change (1 to 9 increments of 1). I.e., for Factor 5 press Key "0", Key "5" and then press "ENTER/START" Key.

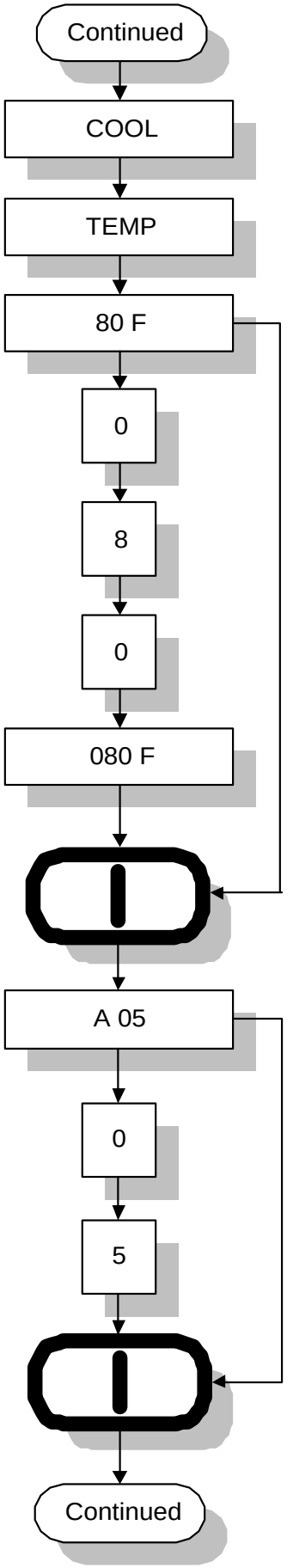

Off Set Factor:
If no change press "ENTER/START" Key. If a change is necessary enter Factor "B" change (1 to 99 in increments of 1). I.e., for Factor 78 press Key "7", Key "8" and then press "ENTER/START" Key.

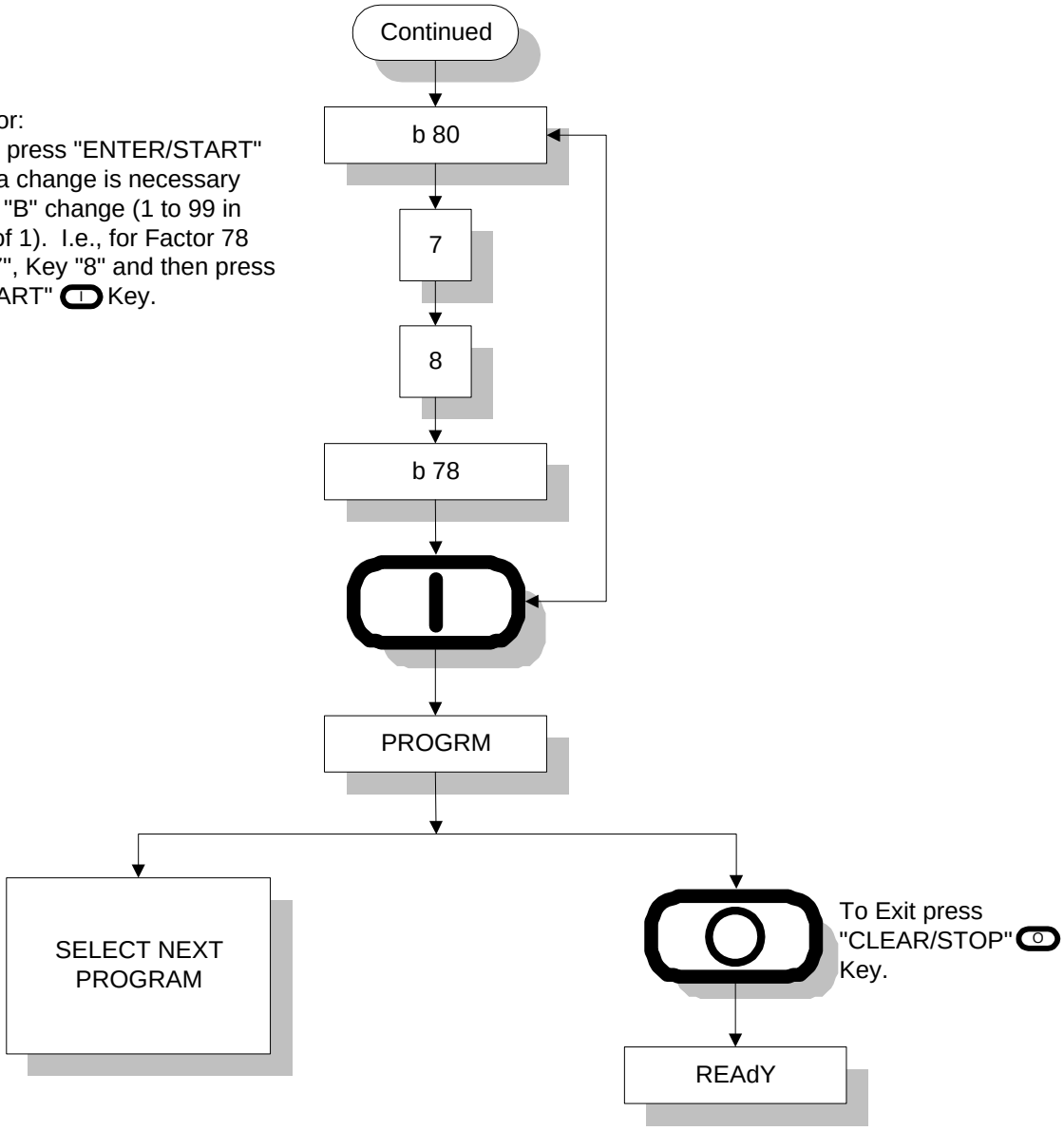


The cycle has now been entered and stored into the computer under Key "A". By pressing Key "A" when the display reads "READY", this will begin a drying cycle.

# Preprogrammed Cycle Programming

Timed (Manual) Drying Cycle

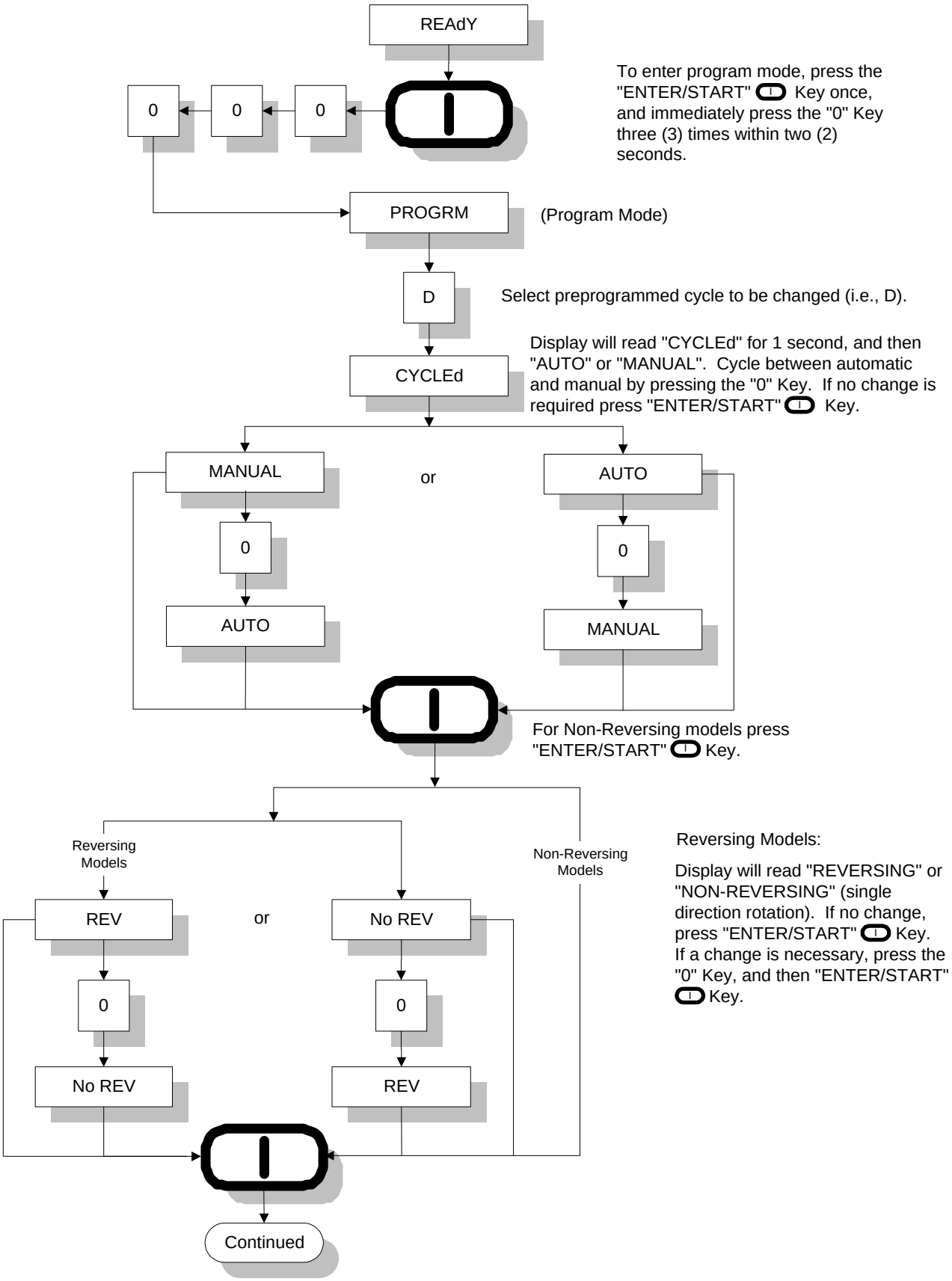

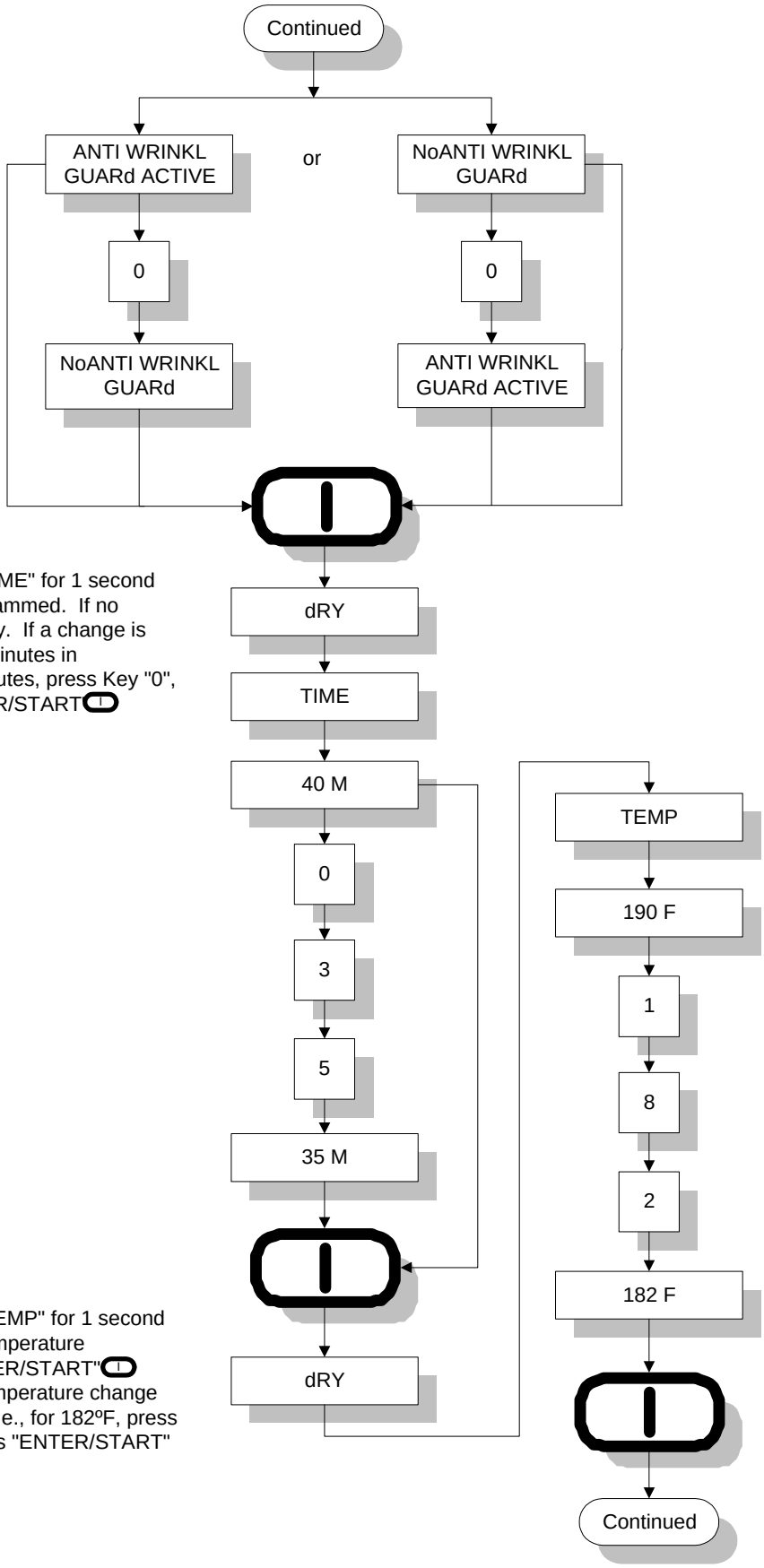


Display will read "dRY" for 1 second, "TIME" for 1 second (drying time) and then drying time programmed. If no change press "ENTER/START" Key. If a change is necessary, enter time change (0 to 99 minutes in increments of 1 minute). I.e., for 35 minutes, press Key "0", Key "3", Key "5", and then press "ENTER/START" Key.

Display will read "dRY" for 1 second, "TEMP" for 1 second (drying temperature) and then drying temperature programmed. If no change press "ENTER/START" Key. If a change is necessary, enter temperature change (100ºF to 200ºF in increments of 1ºF). I.e., for 182ºF, press Key "1", Key "8", Key "2", and then press "ENTER/START" Key.

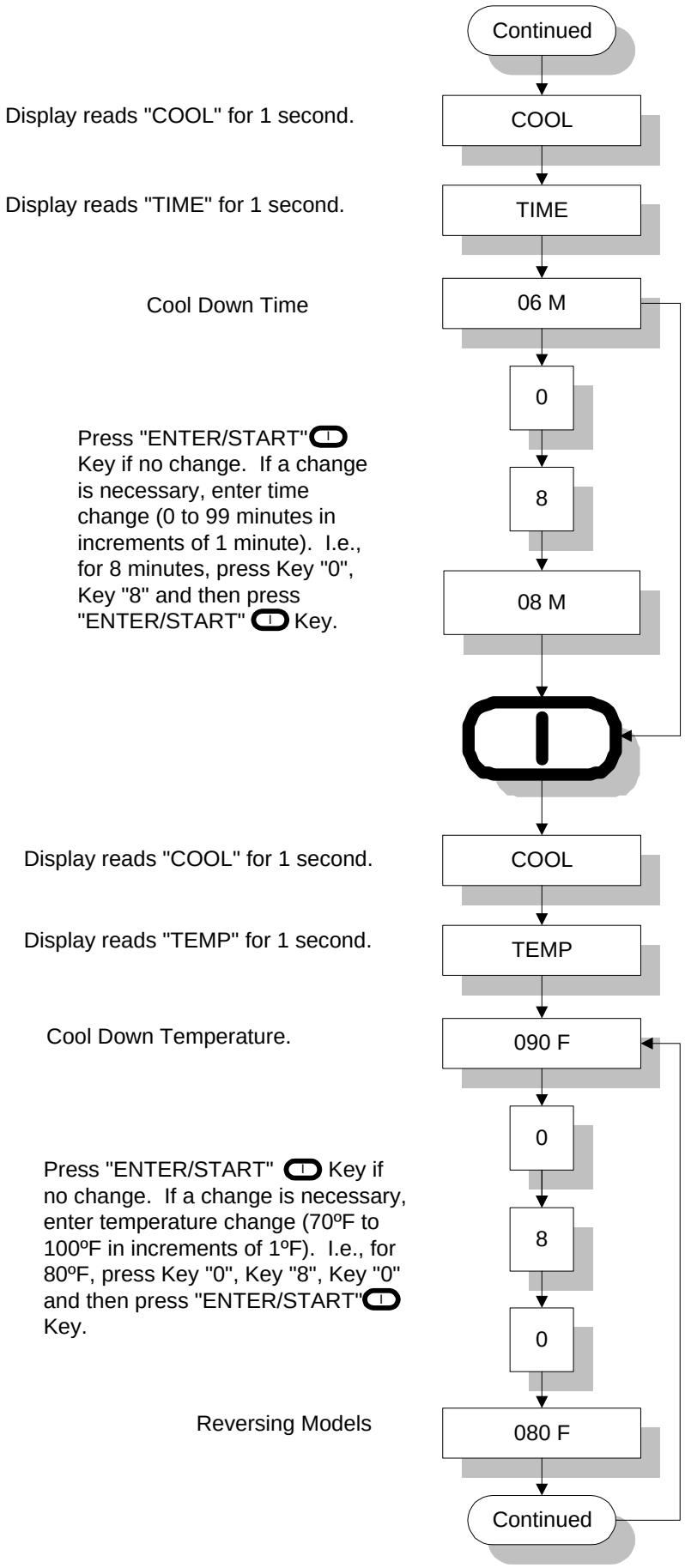
Continued
Display reads "COOL" for 1 second.
COOL
Display reads "TIME" for 1 second.
TIME
Cool Down Time
06 M
0
Press "ENTER/START" Key if no change. If a change is necessary, enter time change (0 to 99 minutes in increments of 1 minute). I.e., for 8 minutes, press Key "0", Key "8" and then press "ENTER/START" Key.
8
08 M
Display reads "COOL" for 1 second.
COOL
Display reads "TEMP" for 1 second.
TEMP
Cool Down Temperature.
090 F
0
Press "ENTER/START" Key if no change. If a change is necessary, enter temperature change (70ºF to 100ºF in increments of 1ºF). I.e., for 80ºF, press Key "0", Key "8", Key "0" and then press "ENTER/START" Key.
8
0
Reversing Models
080 F
Continued

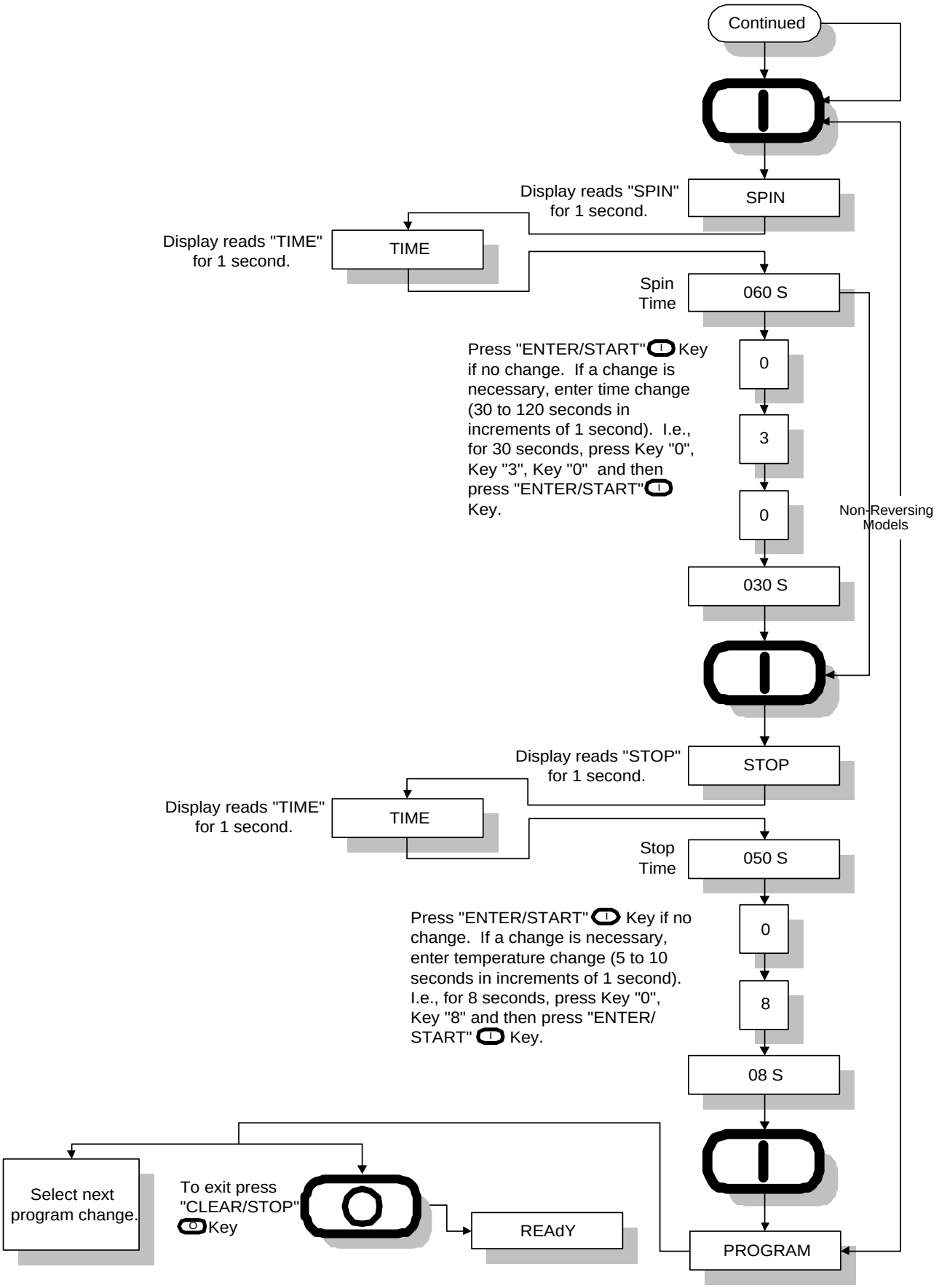
Continued
SPIN
Display reads "SPIN" for 1 second.
TIME
Display reads "TIME" for 1 second.
Spin Time
060 S
Press "ENTER/START" Key if no change. If a change is necessary, enter time change (30 to 120 seconds in increments of 1 second). I.e., for 30 seconds, press Key "0", Key "3", Key "0" and then press "ENTER/START" Key.
0
3
0
Non-Reversing Models
030 S
STOP
Display reads "STOP" for 1 second.
TIME
Display reads "TIME" for 1 second.
Stop Time
050 S
Press "ENTER/START" Key if no change. If a change is necessary, enter temperature change (5 to 10 seconds in increments of 1 second). I.e., for 8 seconds, press Key "0", Key "8" and then press "ENTER/ START" Key.
0
8
08 S
Select next program change.
To exit press "CLEAR/STOP" Key
REAdY
PROGRAM

# Preprogram Location 2

No Cycle In Progress

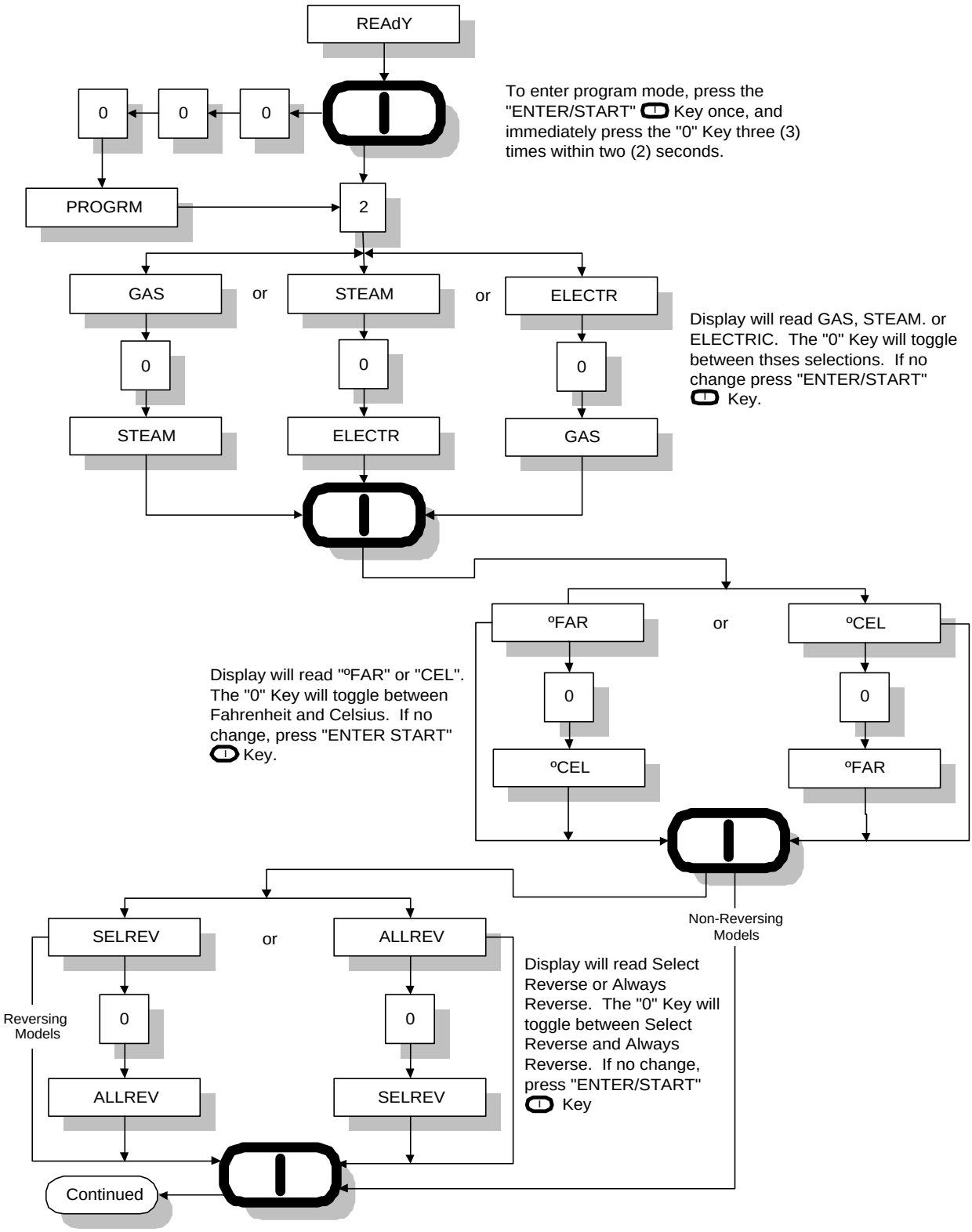

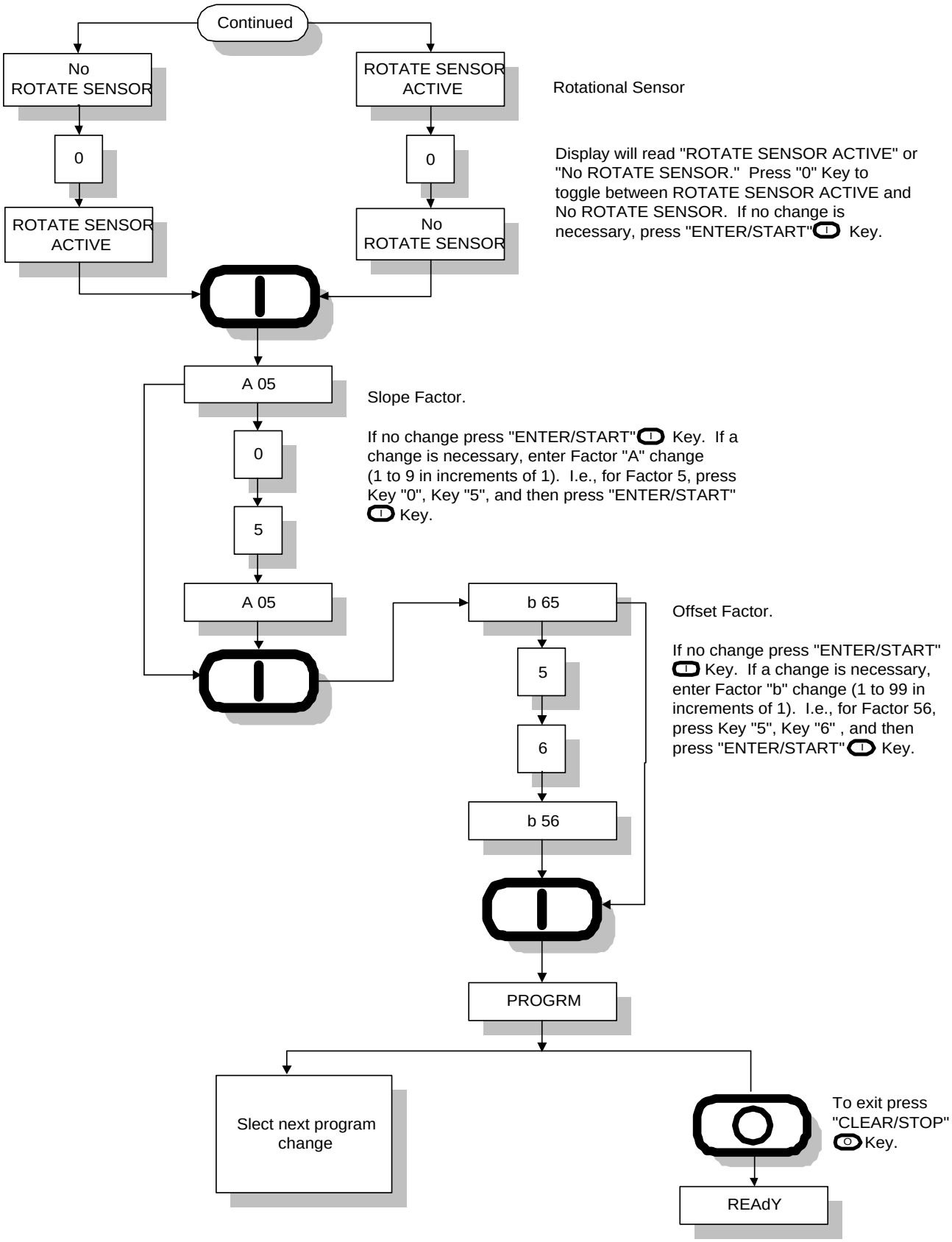
Continued
No ROTATE SENSOR
ROTATE SENSOR ACTIVE
Rotational Sensor
0
0
Display will read "ROTATE SENSOR ACTIVE" or "No ROTATE SENSOR." Press "0" Key to toggle between ROTATE SENSOR ACTIVE and No ROTATE SENSOR. If no change is necessary, press "ENTER/START" Key.
ROTATE SENSOR ACTIVE
No ROTATE SENSOR
A 05
Slope Factor.
If no change press "ENTER/START" Key. If a change is necessary, enter Factor "A" change (1 to 9 in increments of 1). I.e., for Factor 5, press Key "0", Key "5", and then press "ENTER/START" Key.
0
5
A 05
b 65
Offset Factor.
If no change press "ENTER/START" Key. If a change is necessary, enter Factor "b" change (1 to 99 in increments of 1). I.e., for Factor 56, press Key "5", Key "6" , and then press "ENTER/START" Key.
5
6
b 56
PROGRM
Slect next program change
To exit press "CLEAR/STOP" Key.
REAdY

# Preprogram Location 5

No Cycle In Progress

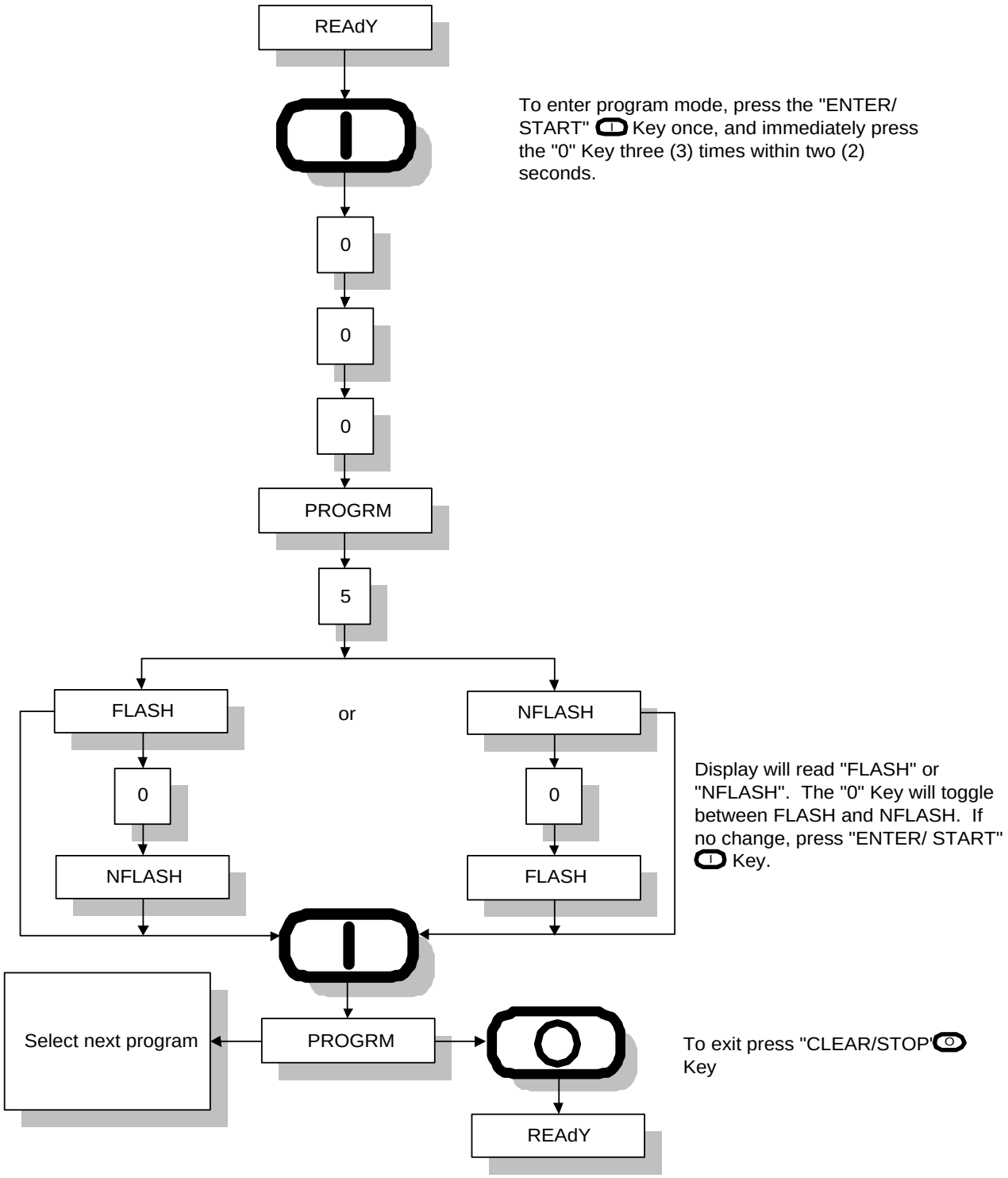

# Program Location 8

No Cycle In Progress

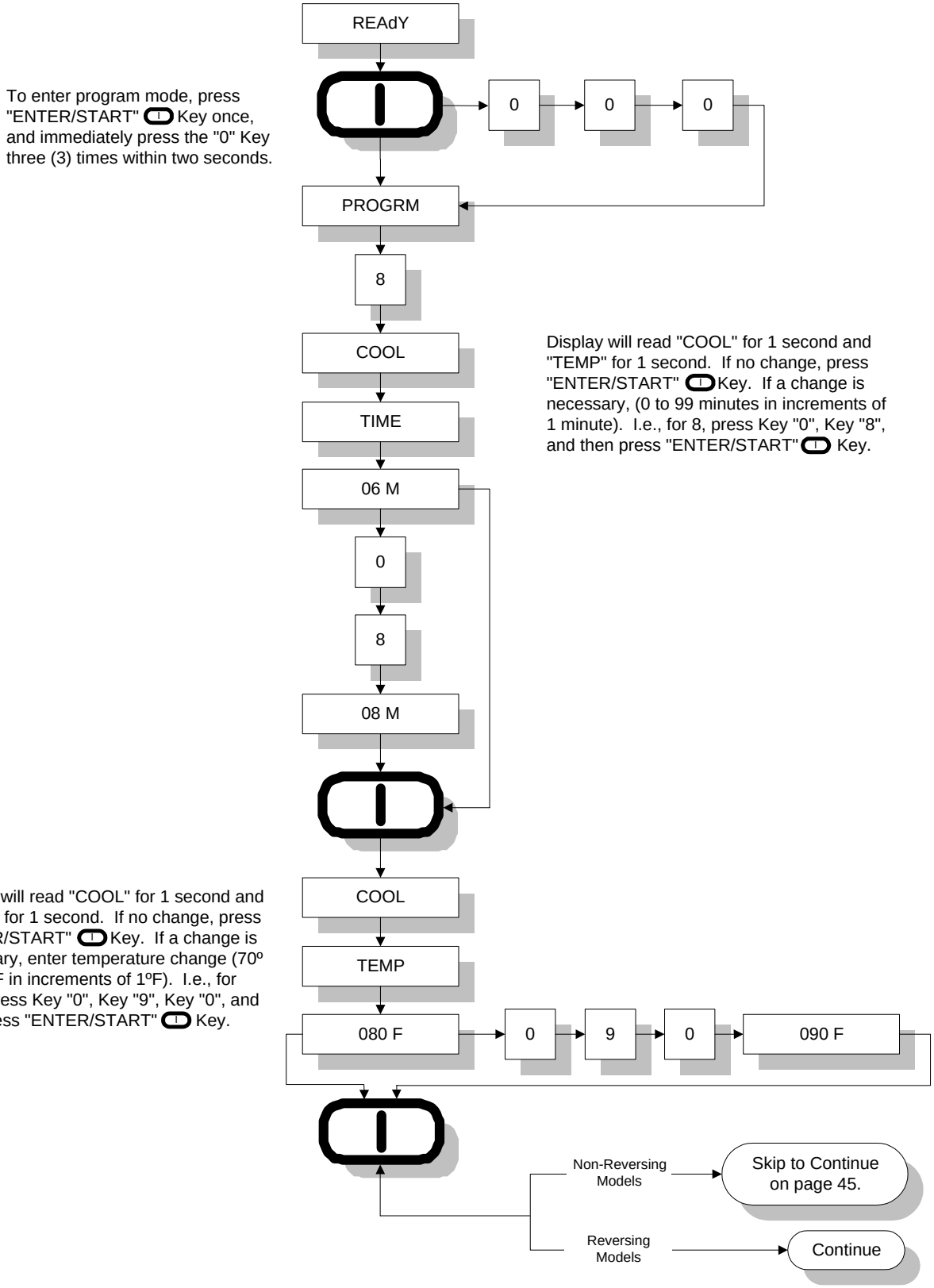

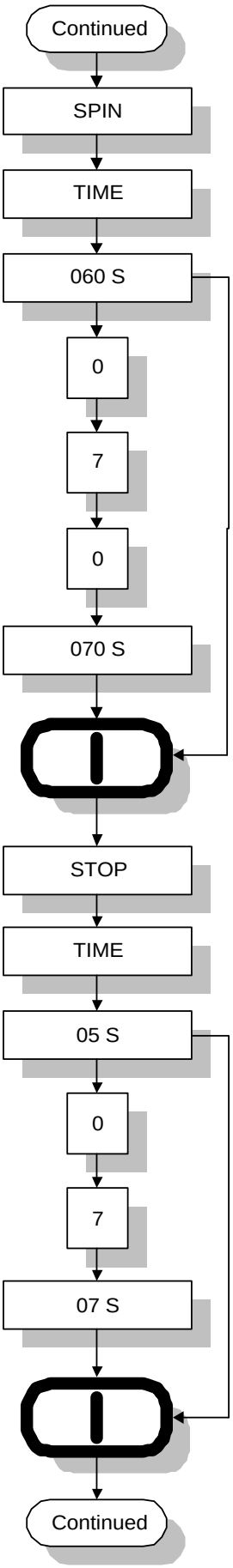


Display will read "SPIN" for 1 second and "TIME" for 1 second. If no change, press "ENTER/START" Key. If change is necessary, enter time change (30 to 120 seconds in increments of 1 second). I.e., for 70 seconds, press Key "0", Key "7", Key "0", and then press "ENTER/START" Key.

Display will read "STOP" for 1 second and "TIME" for 1 second. If no change, press "ENTER/START" Key. If change is necessary, enter time change (5 to 10 seconds in increments of 1 second). I.e., for 7 seconds, press Key "0", Key "7", and then press "ENTER/START" Key.

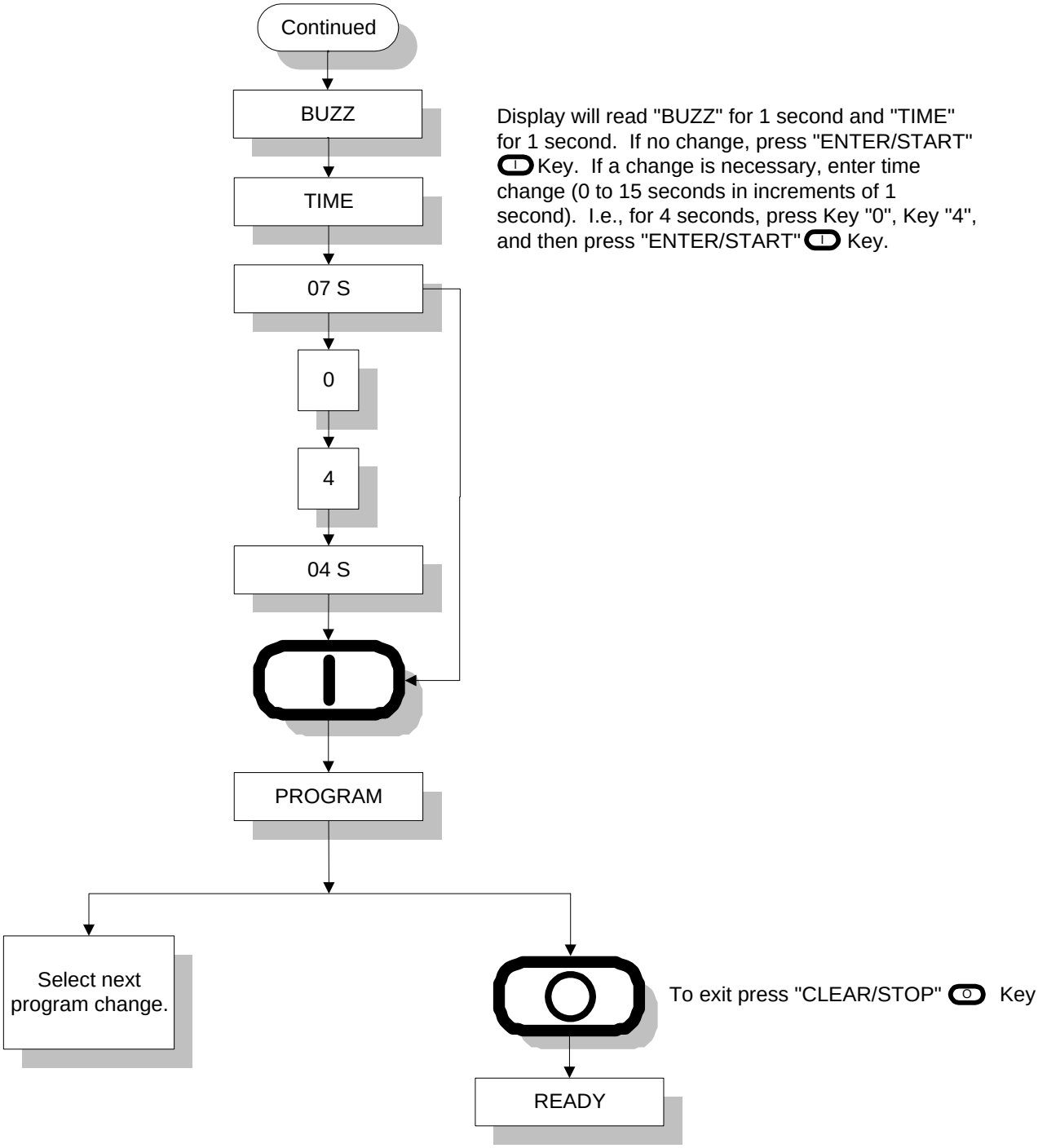
Continued
BUZZ
TIME
07 S
0
4
04 S
PROGRAM
Select next program change.
READY
Display will read "BUZZ" for 1 second and "TIME" for 1 second. If no change, press "ENTER/START" Key. If a change is necessary, enter time change (0 to 15 seconds in increments of 1 second). I.e., for 4 seconds, press Key "0", Key "4", and then press "ENTER/START" Key.
To exit press "CLEAR/STOP" Key

# Preprogram Location 0

No Cycle In Progress

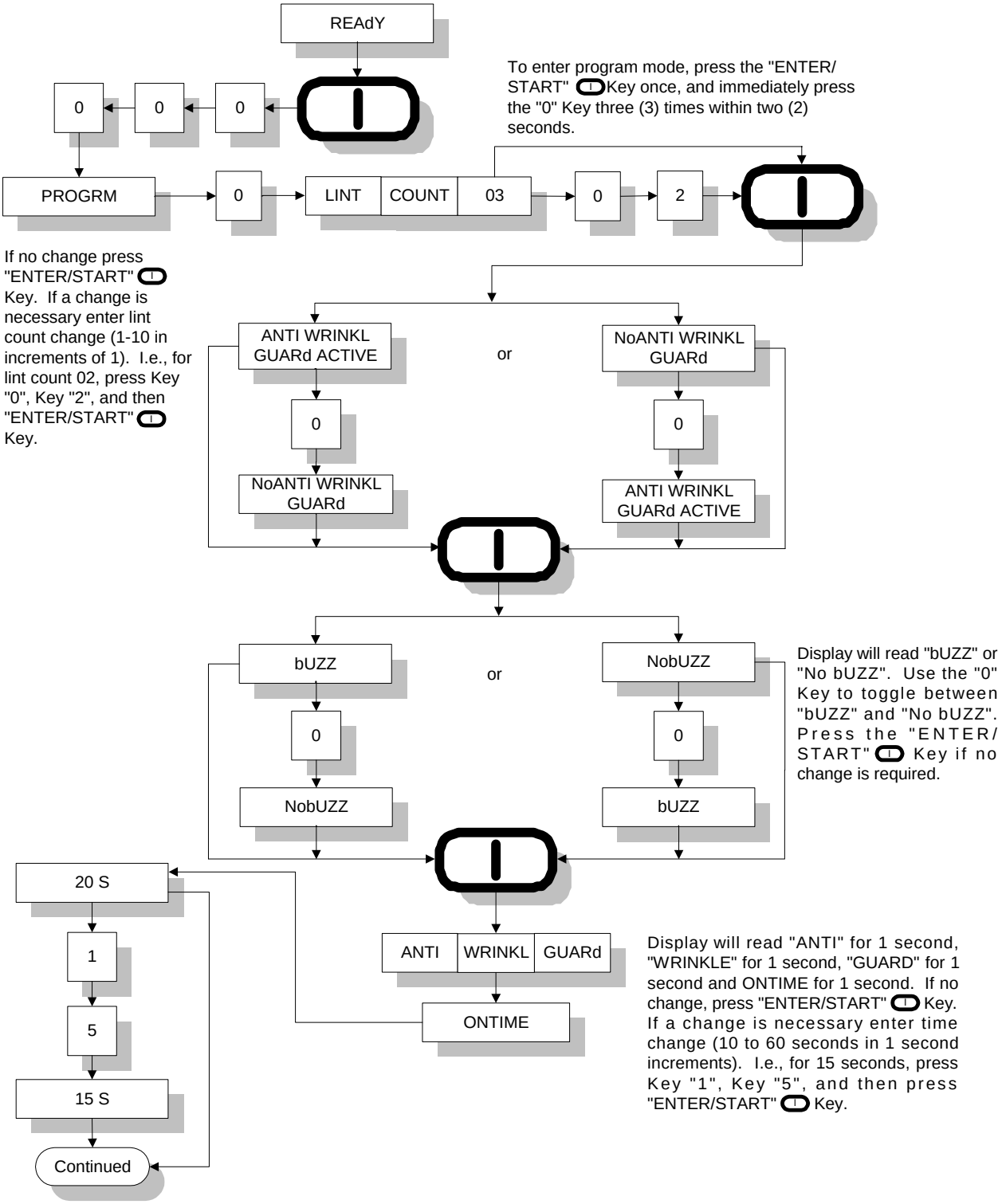

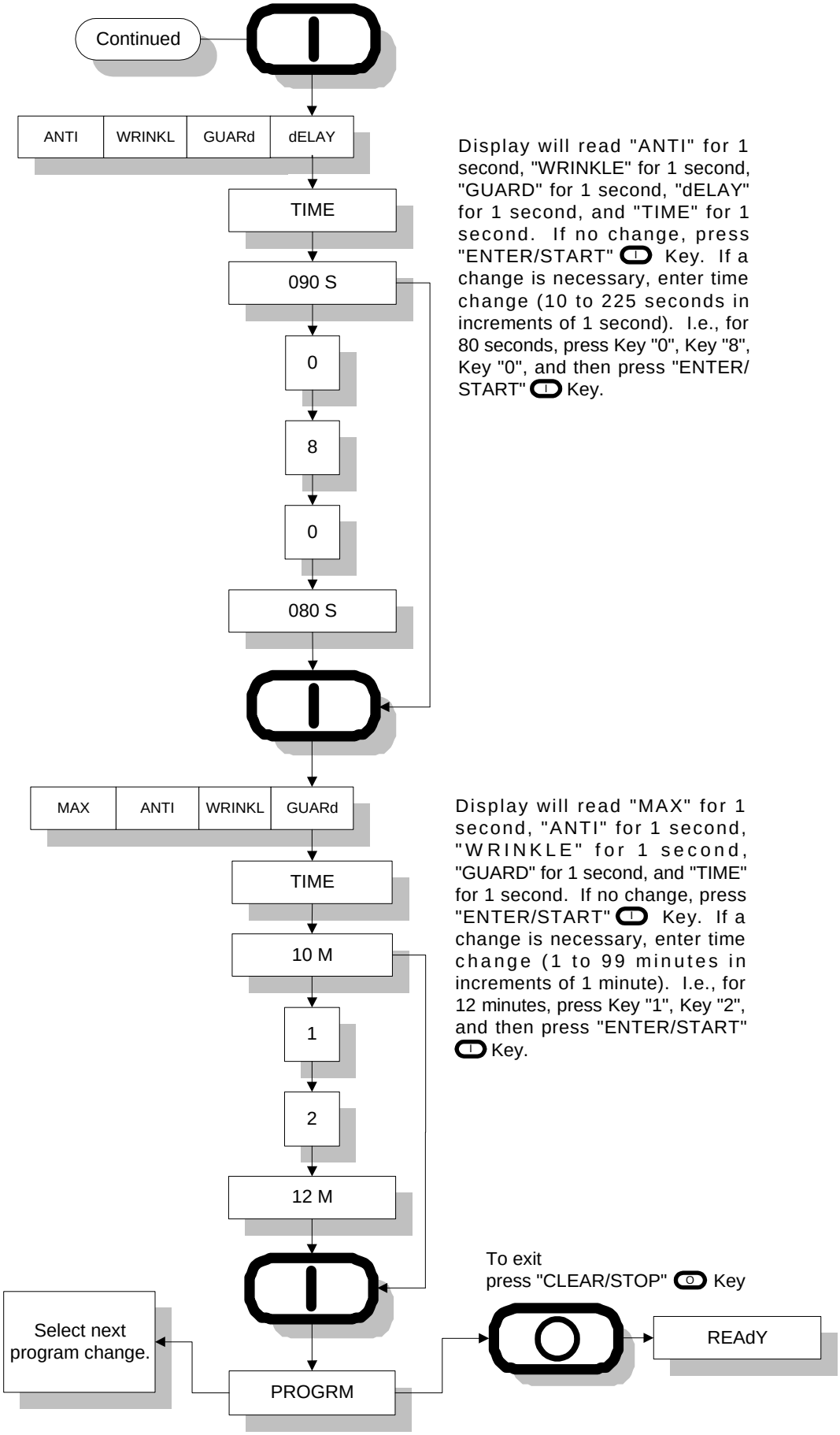


Display will read "ANTI" for 1 second, "WRINKLE" for 1 second, "GUARD" for 1 second, "dELAY" for 1 second, and "TIME" for 1 second. If no change, press "ENTER/START" Key. If a change is necessary, enter time change (10 to 225 seconds in increments of 1 second). I.e., for 80 seconds, press Key "0", Key "8", Key "0", and then press "ENTER/START" Key.

Display will read "MAX" for 1 second, "ANTI" for 1 second, "WRINKLE" for 1 second, "GUARD" for 1 second, and "TIME" for 1 second. If no change, press "ENTER/START" Key. If a change is necessary, enter time change (1 to 99 minutes in increments of 1 minute). I.e., for 12 minutes, press Key "1", Key "2", and then press "ENTER/START" Key.

## Manually Loaded Cycle

Automatic Drying Cycle**(Patent No. 4,827,627)**

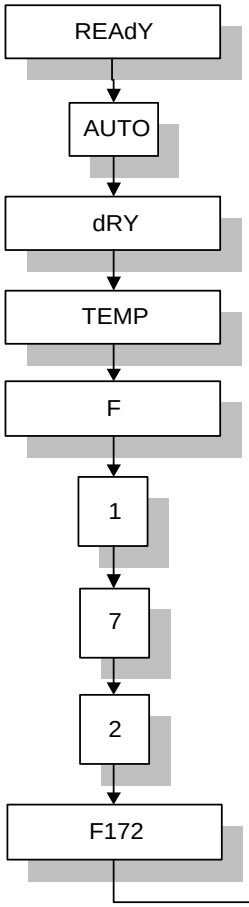


Press Key "AUTO" Key

Display will read "dry" for 1 second, "temp" for 1 second and then "F".

Display will now read "F" (Fabric/Drying Temperature). Enter desired drying temperature (160º to 200ºF in increments of 1ºF). I.e., for 172ºF, press key "1", Key "7", Key "2", and then press the "ENTER/START" Key.

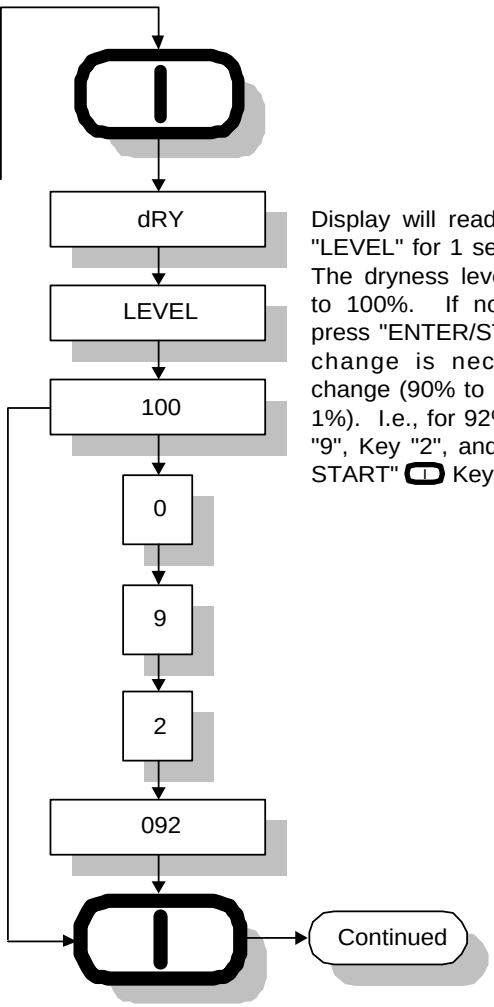


Display will read "dRY" for 1 second, "LEVEL" for 1 second, and then "100". The dryness level is automatically set to 100%. If no change is required press "ENTER/START" Key. If a change is necessary, enter level change (90% to 100% in increments of 1%). I.e., for 92%, press key "0", Key "9", Key "2", and then press "ENTER/START" Key.

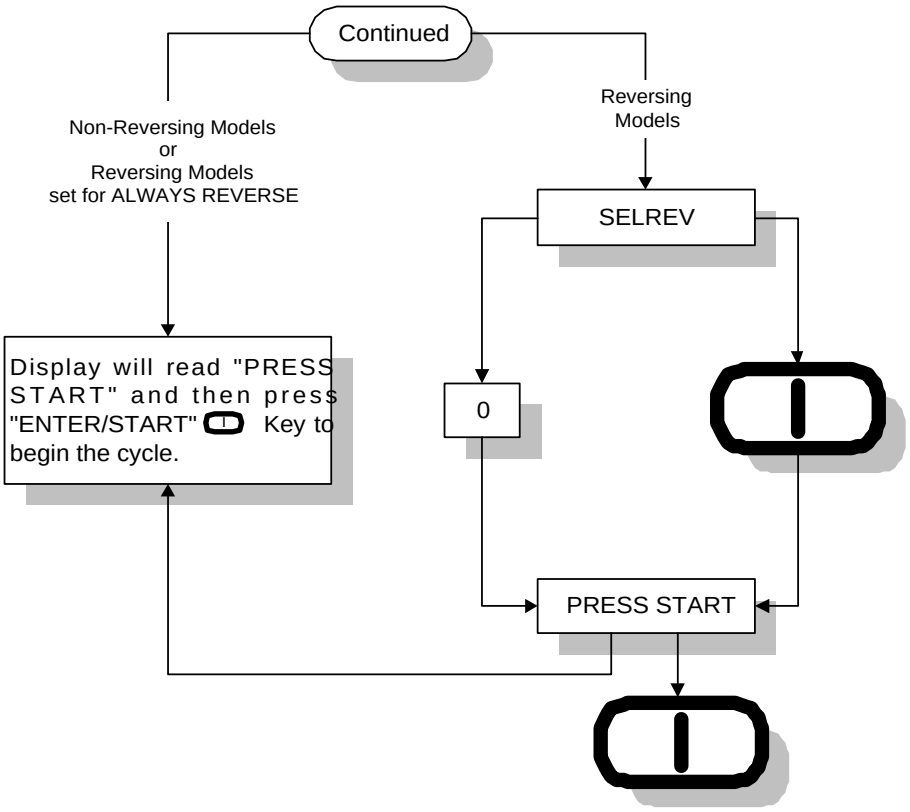


For Reversing models.

Display will read "select reverse" if system parameter is programmed for select reverse. I reverse action is desired, press "ENTER/START" Key. If no reverse action is desired, press "0" Key.

## Manually Loaded Cycle

Timed (Manual) Drying Cycle

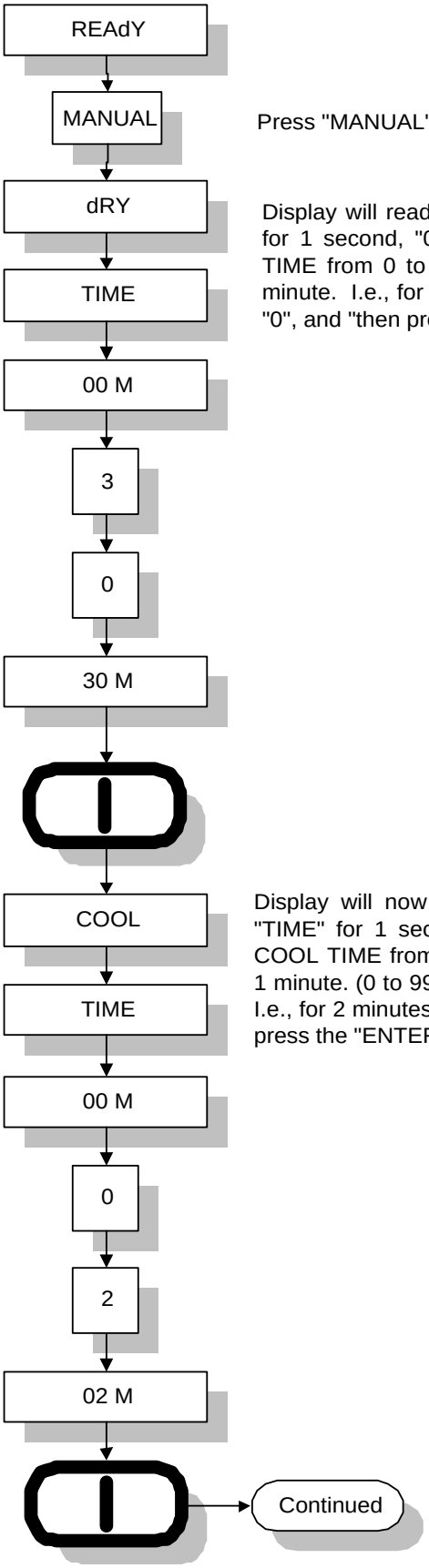


Press "MANUAL" Key

Display will read "dry" for 1 second and "TIME" for 1 second, "00M" displays. Enter the dRY TIME from 0 to 99 minutes in increments of 1 minute. I.e., for 30 minutes, press Key "3", Key "0", and "then press "ENTER/START" Key.

Display will now read "COOL" for 1 second an "TIME" for 1 second, "00M" displays. Enter the COOL TIME from 0 to 99 minutes in increments o 1 minute. (0 to 99 minutes in 1 minute increments) I.e., for 2 minutes, press key "0", Key "2", and ther press the "ENTER/START" Key.

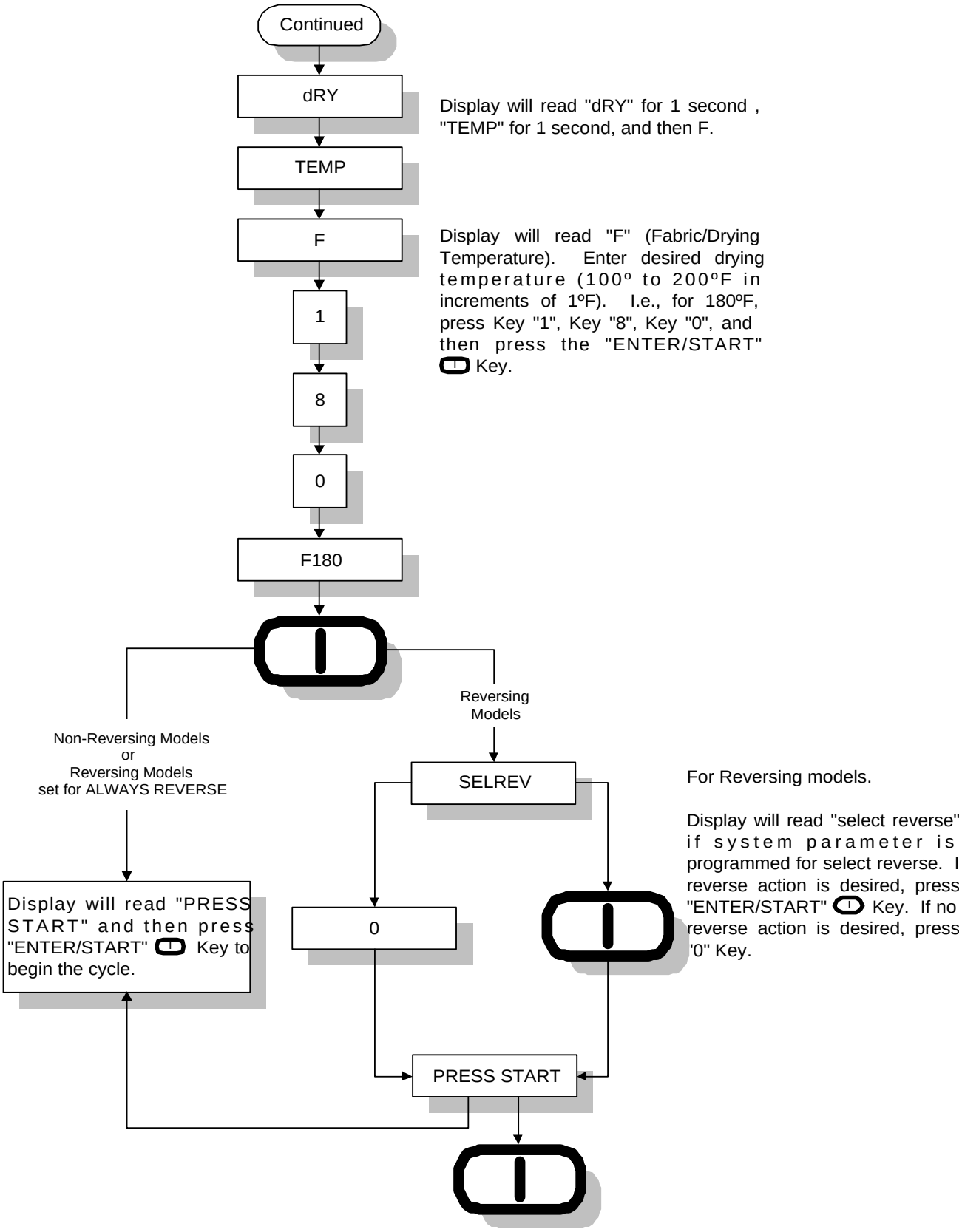
Continued
dRY
Display will read "dRY" for 1 second , "TEMP" for 1 second, and then F.
TEMP
F
Display will read "F" (Fabric/Drying Temperature). Enter desired drying temperature (100º to 200ºF in increments of 1ºF). I.e., for 180ºF, press Key "1", Key "8", Key "0", and then press the "ENTER/START" Key.
1
8
0
F180
Reversing Models
Non-Reversing Models or Reversing Models set for ALWAYS REVERSE
SELREV
For Reversing models.
Display will read "select reverse" if system parameter is programmed for select reverse. I reverse action is desired, press "ENTER/START" Key. If no reverse action is desired, press "0" Key.
Display will read "PRESS START" and then press "ENTER/START" Key to begin the cycle.
0
PRESS START

# SECTION VII

## FACTORY PRESET PARAMETERS/PROGRAMS

### A. PARAMETERS (PROGRAMS) PRESET BY FACTORY FOR NON-REVERSING DRYERS

**CYCLE A:**
Automatic Mode, Anti-Wrinkle Active, Dry Temperature 180º F, Dryness Level 100%, Cool Down Time 6 minutes, Cool Down Temperature 80º F, A Factor, b Factor.

**CYCLE B:**
Automatic Mode, Anti-Wrinkle Active, Dry Temperature 180º F, Dryness Level 98% Cool Down Time 6 minutes, Cool Down Temperature 80º F, A Factor, b Factor.

**CYCLE C:**
Automatic Mode, Anti-Wrinkle Active, Dry Temperature 160º F, Dryness Level 98%, Cool Down Time 4 minutes, Cool Down Temperature 80º F, A Factor, b Factor.

**CYCLE D:**
Manual (Timed) Mode, Anti-Wrinkle Active, Dry Time 40 minutes, Dry Temperature 190º F, Cool Down Time 6 minutes, Cool Down Temperature 80º F.

**CYCLE E:**
Manual (Timed) Mode, Anti-Wrinkle Active, Dry Time 30 minutes, Dry Temperature 180º F, Cool Down Time 4 minutes, Cool Down temperature 80º F.

**CYCLE F:**
Manual (Timed) Mode, Anti-Wrinkle Active, Dry Time 10 minutes, Dry Temperature 170º F, Cool Down Time 2 minutes, Cool Down Temperature 80º F.

**SYSTEM PARAMETERS/PROGRAMS**

Program Location 2 - (**Key "2"**) Specific Heat selection (GAS, STEAM, ELECTRIC), Temperature Conversion Status (set in Fahrenheit), Rotational Sensor (non-active), Factor "A" and Factor "b" (set for your particular model dryer and **should not be** changed).

Program Location 5 - (**Key "5"**)

| | | | |
|---|---|---|---|
| NFlash | - | Drying Auto Cycle<br>Elapse Time _ _ Min | A, B, or C |
| NFlash | - | Drying Manual Cycle<br>_ _ Min Remain | D, E, or F |
| Flash | - | Drying Auto Cycle<br>Elapse Time _ _ Min<br>Drum Temp | A, B, or C<br><br>º F or º C |
| Flash | - | Drying Manual Cycle<br>_ _ Min Remain<br>Drum Temp | D, E, or F<br><br>º F or º C |

Program Location 8 - (**Key "8"**) Timed (Manual) (Automatic) drying mode Cool Time 6 Minutes, Cool Temperature 80º F, Buz (Tone) Time 7-seconds.

Program Location 0 - (**Key "0"**) Lint Count, Anti-Wrinkle Active, Anti-Wrinkle Buz (Tone) Active, Anti-Wrinkle On Time 20-seconds, Anti-Wrinkle Delay Time 90-seconds, Maximum Anti-Wrinkle Time

## B. PARAMETERS (PROGRAMS) PRESET BY FACTORY FOR (OPTIONAL) REVERSING DRYERS

**CYCLE A:**

Automatic Mode, Reverse, Anti-Wrinkle Active, Dry Temperature 180º F, Dryness Level 100%, Cool Down Time 6 minutes, Cool Down Temperature 80º F, A Factor, b Factor.

**CYCLE B:**

Automatic Mode, Reverse, Anti-Wrinkle Active, Dry Temperature 180º F, Dryness Level 98% Cool Down Time 6 minutes, Cool Down Temperature 80º F, A Factor, b Factor.

**CYCLE C:**

Automatic Mode, Reverse, Anti-Wrinkle Active, Dry Temperature 160º F, Dryness Level 98%, Cool Down Time 4 minutes, Cool Down Temperature 80º F, A Factor, b Factor.

**CYCLE D:**

Manual (Timed) Mode, Reverse, Anti-Wrinkle Active, Dry Time 40 minutes, Dry Temperature 190º F, Cool Down Time 6 minutes, Cool Down Temperature 80º F, Spin Time 60-seconds, Stop (Dwell) Time 5-seconds.

**CYCLE E:**

Manual (Timed) Mode, Reverse, Anti-Wrinkle Active, Dry Time 30 minutes, Dry Temperature 180º F, Cool Down Time 4 minutes, Cool Down Temperature 80º F, Spin Time 60-seconds, Stop (Dwell) Time 5-seconds.

**CYCLE F:**

Manual (Timed) Mode, Reverse, Anti-Wrinkle Active, Dry Time 10 minutes, Dry Temperature 170º F, Cool Down Time 2 minutes, Cool Down Temperature 80º F, Spin Time 60-seconds, Stop (Dwell) Time 5-seconds.

### SYSTEM PARAMETERS/PROGRAMS

Program Location 2 - (**Key "2"**) Specific Heat selection (GAS, STEAM, ELECTRIC), Temperature Conversion Status (set in Fahrenheit), Select Reverse, Rotational Sensor (non-active), Factor "A" and Factor "b" (set for your particular model dryer and **should not be** changed).

Program Location 5 - (**Key "5"**) NFlash - Auto
NFlash - Man
Flash - Auto
Flash - Man

Program Location 8 - (**Key "8"**) Timed (Manual) (Automatic) drying mode Cool Time 6 Minutes, Cool Temperature 80º F, Spin Time 60-seconds, Stop (Dwell) Time 5-seconds, Buz (Tone) Time 7-seconds.

Program Location 0 - (**Key "0"**) Lint Count, Anti-Wrinkle Active, Anti-Wrinkle Buz (Tone) Active, Anti-Wrinkle On Time 20-seconds, Anti-Wrinkle Delay Time 90-seconds, Maximum Anti-Wrinkle Time 10 minutes.

# SECTION VIII

## SYSTEM PARAMETER/PROGRAM LOCATION CHART

| PHASE 6 OPL PROGRAM LOCATIONS | |
|---|---|
| **Locations/Programs** | **Cycles Affected** |
| **Program Location 2 (Key "2")** | |
| Dryer Operation Specific Heat Selection (GAS, STEAM, ELECTRIC) | MLC and PPC |
| Display Temperature (ºF or ºC) | MLC and PPC |
| Select Reverse or Always Reverse* | MLC ONLY |
| Rotational Sensor or No Rotational Sensor | MLC and PPC |
| "A" Factor (Slope) - refer to **"A"** and **"B" Factor Parameters** on **page 56** | MLC and PPC |
| "B" Factor (Offset) - refer to **"A"** and **"B" Factor Parameters** on **page 56** | MLC and PPC |
| **Program Location 5 (Key "5")** | |
| Flash or No Flash | MLC and PPC |
| **Program Location 8 (Key "8")** | |
| Cool Down Time | MLC ONLY |
| Cool Down Temperature | MLC ONLY |
| Spin Time | MLC ONLY |
| Stop (Dwell) Time | MLC ONLY |
| End-Of-Cycle Buz (Tone) Time | MLC and PPC |
| **Program Location 0 (Key "0")** | |
| Lint Count | MLC and PPC |
| With or Without Anti-Wrinkle | MLC ONLY |
| Anti-Wrinkle Buz (Tone) Time | MLC and PPC |
| Anti-Wrinkle On Time | MLC and PPC |
| Anti-Wrinkle Delay Time | MLC and PPC |
| Maximum Anti-Wrinkle Time | MLC and PPC |

MLC = Manually Loaded Cycles
PPC = Preprogrammed Cycles
* Reversing Models ONLY

# SECTION IX

## PHASE 6 OPL PROGRAMMING LIMITS

### A. PREPROGRAMMED CYCLES

1. Automatic Cycle (Mode) (**Patent No. 4,827,627**)

   a. Drying Temperature ("**dRY TEMP**") from 160º F to 200º F in one-degree increments.

   b. Dryness Level (percentage of dryness ("**dRY LEVEL**") from 90% to 100% in one-percent increments.

   c. Cool Down Time ("**COOL TIME**") from 0 to 99 minutes in one-minute increments.

   d. Cool Down Temperature ("**COOL TEMP**") from 70º F to 100º F in one-degree increments.

2. Timed (Manual) Drying Cycle (Mode)

   a. Drying Temperature ("**dRY TEMP**") from 100º F to 200º F in one-degree increments.

   b. Drying Time ("**dRY TIME**") from 0 to 99 minutes in one-minute increments.

   c. Cool Down Time ("**COOL TIME**") from 0 to 99 minutes in one-minute increments for preprogrammed cycle.

   d. Cool Down Temperature ("**COOL TEMP**") from 70º F to 100º F in one-degree increments.

   e. Reversing Models.

      1) Automatic Cycle (**Patent No. 4,827,627**) is not programmable. Refer to **Fixed Parameters** on **page 55**.

      2) Timed Cycle

         a) Spin Time ("**SPIN TIME**") from 30-seconds to 120-seconds in one-second increments.

         b) Stop (Dwell) Time ("**STOP TIME**") from 5-seconds to 10-seconds in one-second increments.

## B. SYSTEM PARAMETERS (PROGRAM LOCATIONS)

1. **Factor "A"** (Slope) from 1 to 9 in increments of one (1).

2. **Factor "b"** (Heat Loss - Offset) from 1 to 99 in increments of one (1).

3. Manual Selection Auto Mode ("COOL TIME") from 0 to 99 minutes in one-minute increments.

4. Maximum Guard Time ("**MAX ANTI WRINKL GUARd TIME**") from 1 minute to 99 minutes in one-minute increments.

5. Guard On Time ("**ANTI WRINKL GUARd ON TIME**") from 10 to 60-seconds in one-second increments.

6. Guard Delay Time ("**ANTI WRINKL GUARd dELAY TIME**") from 10 to 255-seconds in one-second increments.

7. Buzz (Tone) Time ("**bUZZ**") from 0 to 15-seconds in one-second increments.

8. Flash Display Cycle/Time ("**FLASH**") 15-seconds.

9. Flash Display Temperature/Time ("**dRY TEMP**") 1-second.

10. Lint count can be set from (1-10) drying cycles. The routine will first prompt the user "**REAdY CLEAN LINT**" two (2) drying cycles prior to the dryer locking the operator out. The "**CLEAN LINT**" displays when the dryer is in a locked out state. This will not be cleared until the lint drawer has been cleaned. Then the dryer will return to its operating function.

## C. FIXED PARAMETERS

1. Spin Time ("**SPIN TIME**") is fixed at 180-seconds in forward and 120-seconds in reverse.

2. Stop (Dwell) Time ("**STOP TIME**") is fixed at 5-seconds (in the Auto Mode) and <u>is</u> <u>not</u> adjustable.

# SECTION X

## PHASE 6 AUTO CYCLE (PATENT NO. 4,827,627)
## "A" AND "B" FACTOR PARAMETERS

| MLG - GAS | | |
|---|---|---|
| MODEL | "A" | "B" |
| ML-55 | 5 | 65 |
| | | |
| ML-75 | 5 | 73 |
| | | |
| ML-95 | 5 | 80 |
| | | |
| ML-130 | 5 | 75 |
| | | |
| ML-145 | 5 | 80 |
| | | |
| ML-170 | 5 | 70 |
| | | |

| MLE - ELECTRIC | | | |
|---|---|---|---|
| MODEL | KW | "A" | "B" |
| ML-55 | 24 | 4 | 81 |
| | 30 | 5 | 72 |
| ML-75 | 20 | 2 | 81 |
| | 24 | 2 | 81 |
| | 30 | 3 | 76 |
| | 36 | 3 | 75 |
| ML-95 | | | |
| | | | |
| | | | |
| | | | |
| ML-130 | 72 | 5 | 80 |
| | 80 | 5 | 90 |
| | | | |
| | | | |
| ML-145 | | | |
| | | | |
| | | | |
| | | | |
| ML-170 | | | |
| | | | |
| | | | |
| | | | |

| MLS - STEAM | | |
|---|---|---|
| MODEL | "A" | "B" |
| ML-55 | | |
| | | |
| ML-75 | | |
| | | |
| ML-95 | 5 | 80 |
| | | |
| ML-130 | 5 | 75 |
| | | |
| ML-145 | 5 | 80 |
| | | |
| ML-170 | | |
| | | |

**IMPORTANT:** If your particular model/dryer A & B factor **is not** shown in above charts, contact the **ADC** Service Department for the appropriate factors for your particular dryer. When doing so, please have the dryer **model** and **serial number** available.

**NOTE:** For letter and symbol designations refer to the following page (**page 57**).

**IMPORTANT:** Phase 6 OPL microprocessor controller (computer) pre-set program/parameter change.

As of March 9, 1999, the "Anti-Wrinkle" factory programs for **ALL** Phase 6 OPL Microprocessor Controllers (computers) used in production are preprogrammed with *new* parameters as noted below.

The programs/parameters in question reside in Program Location 0 (**Key 0**).

| PROGRAM NAME | OLD PARAMETER | NEW PARAMETER |
|---|---|---|
| Anti-Wrinkle On Time | 20-seconds | 60-seconds |
| Anti-Wrinkle Delay Time | 90-seconds | 120-seconds |
| Maximum Anti-Wrinkle Time | 10 minutes | 99 minutes |

* "A" and "B" Factors NOT AVAILABLE at time of printing.

**(A)** For **60 Hz** models **ONLY**.
**(B)** For **50 Hz** models **ONLY**.
**(C)** For models manufactured with optional Heat Reclaimer (HR) **ONLY**.
**(D)** For models manufactured with a 7.5 HP blower (fan) motor.
**(E)** For models manufactured with a 15 HP blower (fan) motor.

**IMPORTANT:** The "A" and "B" Factors have been preprogrammed by the factory and ***should not be*** changed in the field unless the Phase 6 OPL microprocessor controller (computer) should fail and is being replaced. **THE REPLACEMENT** PHASE 6 OPL MICROPROCESSOR CONTROLLER (COMPUTER) ***MUST BE*** REPROGRAMMED FOR THE SPECIFIC MODEL SHOWN IN THE "A" and "B" FACTOR PARAMETERS CHART ON THE PREVIOUS PAGE (**page 56**). The "A" "B" FACTOR LABEL IS LOCATED IN THE TOP CONTROL PANEL, BEHIND THE PHASE 6 KEYBOARD (TOUCH PAD) - DISPLAY DOOR.

IMPORTANT - PH 6 COMPUTER SYSTEM

If the computer's display reads "TEMP SENSOR FAIL CHECK TEMP SENSOR FUSE", check the continuity of the 1/8 amp fuse on the computer board.
If the fuse continuously fails check for a short circuit in the temperature sensor lines.

The auto cycle factors for this dryer are:

| | | |
|---|---|---|
| Program Location 2 | A _____ | B _____ |
| Cycle A | A _____ | B _____ |
| Cycle B | A _____ | B _____ |
| Cycle C | A _____ | B _____ |
| Serial Number | __ __ __ __ __ __ | |

P/N: 114051

MAN3474

# SECTION XI

## PHASE 6 OPL SYSTEM DIAGNOSTICS

**IMPORTANT: YOU MUST DISCONNECT AND LOCKOUT ELECTRIC, GAS, OR STEAM SUPPLY BEFORE ANY COVERS OR GUARDS ARE REMOVED FROM THE DRYER TO ALLOW ACCESS FOR CLEANING, ADJUSTING, INSTALLATION, OR TESTING OF ANY EQUIPMENT PER OSHA** (Occupational Safety and Health Administration) **STANDARDS.**

**ALL** major circuits, including door, microprocessor temperature sensor, heat and motor circuits are monitored. The Phase 6 OPL microprocessor controller (computer) will inform the user, via the light emitting diode (L.E.D.) display of certain failure codes, along with indicators both in L.E.D. display and at the output of each relay (and door switch circuit) to easily identify failures.

### A. DIAGNOSTIC (L.E.D. DISPLAY) FAILURE CODES

1. **SAIL SWITCH FAIL -** this routine will prevent start up on the dryer unless the sail switch is in the correct position. If the sail switch is closed prior to start up the display will read "SAIL SWITCH FAIL" along with an audio indication.

2. **No AIRFLOW -** if the sail switch opens during cycle operation the display will read "NO AIRFLOW" along with an audio indication. The dryer will continue to run with no heat for 3 minutes or until the temperature drops below 100º F. Upon failure the dryer will shut down and display "No AIRFLOW" with an audio indication.

3. **bURNER SAFETY FAIL -** routine monitors the temperature above the burner. If the Burner Hi-Limit switch opens the display will read "bURNER SAFETY FAIL." The dryer will run with no heat for 3 minutes or until the temperature drops below 100º F. Upon failure the dryer will shut down and display "bURNER SAFETY FAIL" with an audio indication.

4. **dRUM SAFETY FAIL -** this routine monitors the basket (tumbler) temperature if the basket (tumbler) Hi-Limit switch opens prior or during the cycle while the heat was on the dryer will display "dRUM SAFETY FAIL." The dryer will continue to run with no heat for 3 minutes or until the temperature drops below 100º F. Upon failure the dryer will shut down and display "dRUM SAFETY FAIL" with an audio indication.

5. **NoHEAT -** this routine monitors the gas valve response. If the valve output is discontinued by the ignition control while the heat output cycle is active the dryer will display "NoHEAT" the dryer will run with no heat for 3 minutes or until the temperature drops below 100º F. If the basket (tumbler) temperature is below 100º F upon failure the dryer will shut down and display "NoHEAT" with an audio indication.

6. **bURNER CONTRL FAIL -** this routine monitors the ignition control's gas valve output response. If the valve output signal <u>is</u> <u>not</u> present from the ignition control within the valve time limits the Phase 6 microprocessor controller (computer) determines the ignition control has failed. If this occurs when the cycle is active the dryer will display "bURNER CONTRL FAIL." If the basket (tumbler) temperature is above 100º F the dryer will continue to display "bURNER CONTRL FAIL." The dryer will run with no heat for 3 minutes or until the temperature drops below 100º F. If the basket (tumbler) temperature is below 100º F upon failure the dryer will shut down and display "bURNER CONTROL FAIL" with an audio indication.

7. **bURNER FLAME FAIL -** this routine allows two (2) Flame Out retries to occur before proceeding into the error. The count of two (2) will be established every time the call for heat was to occur. Only if it reaches the count of two (2) before the basket (tumbler) temperature has reached the set temperature will this error triggered. The dryer will run with no heat for 3 minutes or until the temperature drops below 100º F. If the basket (tumbler) temperature is below 100º F upon failure, the dryer will shut down and display "bURNER FLAME FAIL" with an audio indication. This process will occur every time the heat output is active.

8. **MAIN dOOR -** this monitors the door circuit. If the dryer was not active and the main door was opened the display would read "REAdY." If a program attempt was made with the main doors open the display will read "MAIN dOOR" with an audio indication. If the dryer is active and the main door was opened the display would read "MAIN dOOR" with no audio indication and the dryer will shut down. Once the main door has closed the display would read "PRESS START" press the "ENTER/START" ⊡ Key and it will continue the programmed cycle.

9. **LINT dOOR -** this monitors the lint drawer/door circuit. If the dryer was not active and the lint drawer/door was opened the display would read "REAdY." If a program attempt was made with the lint drawer/door open the display would read "LINT dOOR" with an audio indication. If the dryer was active and the lint drawer/door was opened the display would read "LINT dOOR" with no audio indication and the dryer will shut down. Once the lint door was closed the display would read "PRESS START" press the "ENTER/START" ⊡ Key and it will continue the programmed cycle.

10. **TEMP SENSOR FAIL CHECK TEMP SENSOR FUSE -** this routine monitors the basket (tumbler) temperature. When the temperature sensor or fuse opens with the dryer not active the display will read "TEMP SENSOR FAIL CHECK TEMP SENSOR FUSE" with an audio indication. If the dryer was active at the time that the temperature sensor or fuse opened the display would read "TEMP SENSOR FAIL CHECK TEMP SENSOR FUSE." If the basket (tumbler) temperature is above 100º F the dryer will continue to display "TEMP SENSOR FAIL CHECK TEMP SENSOR FUSE" with an audio indication and run with no heat for 3 minutes or until the temperature drops below 100º F. If the basket (tumbler) temperature is below 100º F upon failure the dryer will shut down and display "TEMP SENSOR FAIL CHECK TEMP SENSOR FUSE" with an audio indication. The display will continue to read "TEMP SENSOR FAIL CHECK TEMP SENSOR FUSE" an audio indication will sound for approximately 5-seconds, every 30-seconds until the problem is corrected or the power to the dryer is discontinued (and the problem is corrected).

**NOTE:** Once the Phase 6 microprocessor controller (computer) detects a problem in the heat circuit, it updates every 30-seconds, so that if the problem was a loose connection in the circuit which corrected itself, the "TEMP SENSOR FAIL CHECK TEMP SENSOR FUSE" condition would automatically be cancelled and the display will return to "REAdY."

11. **ROTATE SENSOR FAIL -** indicates a rotational sensor circuit failure meaning that there is a fault somewhere in the basket (tumbler) rotation circuit, or the Phase 6 OPL microprocessor controller (computer) program related to this circuit (Program Location 2) is set incorrectly. In the active mode it **should be** (ROTATE SENSOR ACTIVE), if the dryer is not equipped with the optional rotational sensor it **should be** set in the nonactive mode (No ROTATE SENSOR).

**NOTE: RPM** - This routine monitors the timing response from the existing rotational sensor input and derives a RPM measurement. To display this RPM measurement (press the "ENTER/START" ⊡ Key once and release, then press the "ENTER/START" ⊡ Key a second time and hold...this will display the RPM measurement). The rotational sensor **must be** active for operation of this feature.

12. **CHECK MAIN FUSE** - indicates that the circuit fuse protection which is located on the back side of the Phase 6 microprocessor controller (computer) the display would read "CHECK MAIN FUSE." If the display continues after the fuse has been replaced then it is the fault of the Phase 6 microprocessor controller (computer).

13. **"Hot"** - indicates a possible overheating condition. The Phase 6 OPL microprocessor controller (computer) monitors the temperature in the dryer at **ALL** times. If the Phase 6 OPL microprocessor controller (computer) detects that the temperature in the dryer has exceeded 220º F, it will disable **ALL** outputs (shut the dryer down), the Tone (buzzer) will sound for approximately 5-seconds, and the light emitting diode (L.E.D.) display will read "**Hot.**" The L.E.D. display will continue to read "**Hot**" until the temperature sensed has dropped below 220º F or lower and the Phase 6 OPL microprocessor controller (computer) is manually reset by pressing the "CLEAR/STOP" ⊡ Key.

## B. L.E.D. DISPLAY INDICATORS

The L.E.D. indicator dots located on the top portion if the display indicate the various Phase 6 OPL computer output functions while a cycle is in progress. These indicator dots (as shown in the **illustration below**) **DO NOT** necessarily mean that the outputs are functioning. They are only indicating that the function output **should be** active (on).

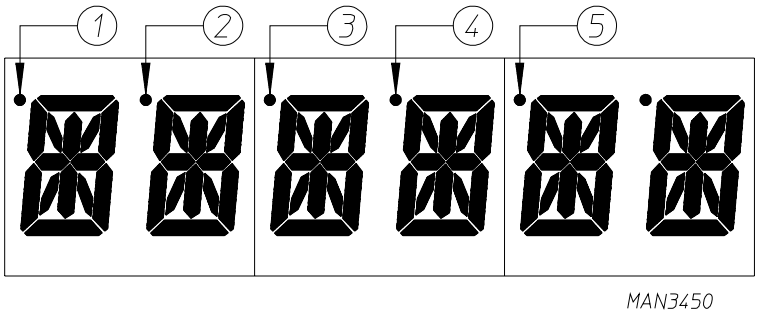


1. **L.E.D. DISPLAY INDICATOR NUMBER 1**
   a. For Optional Reversing Models:
      1) This indicator dot is on when the drive (basket [tumbler]) motor is operating in the forward mode (clockwise [CW] direction).

2. **L.E.D. DISPLAY INDICATOR NUMBER 2**
   a. For Optional Reversing Models:
      1) This indicator dot is on when the drive (basket [tumbler]) motor is operating in the reverse mode (counterclockwise [CCW] direction).

3. **L.E.D. DISPLAY INDICATOR NUMBER 3**
   a. Heat Circuit Indicator:
      1) This indicator dot is on whenever the Phase 6 OPL microprocessor controller (computer) is calling for the heating circuit to be active (on).

4. **Light Emitting Diode (L.E.D.) DISPLAY INDICATOR NUMBER 4**
   a. On Indicator
      1) This indicator dot is on whenever a cycle is in progress. Additionally, when the Anti-Wrinkle program is active, the indicator dot will be on whenever the Phase 6 OPL microprocessor controller (computer) is in the Guard On Time program.

5. **L.E.D. DISPLAY INDICATOR NUMBER 5**
   a. Air Jet Circuit Indicator - ***OPTIONAL***
      1) This indicator dot is on at the end of the dryer cycle for approximately 60-seconds.

## C. PHASE 6 OPL MICROPROCESSOR CONTROLLER (COMPUTER) RELAY OUTPUT L.E.D. INDICATORS

There are a series of five (5) L.E.D. indicators (ORANGE LIGHTS) located at the backside are of the Phase 6 OPL microprocessor controller (computer). These are identified or labeled (from top to bottom in the illustration below as: FAN-BLOWER, FOR-FORWARD, REV-REVERSE, AIR-AIR-JET, HT1-HEAT OUTPUT. There are a series of seven (7) L.E.D. Indicators (RED LIGHTS) FUSE-MAIN FUSE, LINT-LINT DOOR, MAIN-MAIN DOOR, DRUM-TUMBLER HI-LIMIT, SAIL-SAIL SWITCH, BURN-BURNER HI-LIMIT, FLAME-FLAME PROBE). The L.E.D. in the center of the board (RED LIGHT) indicates power supplied to the Phase 6 OPL microprocessor controller (computer). These L.E.D.'s indicate the inputs and outputs of the Phase 6 OPL microprocessor controller (computer) as it monitors the safety circuits.

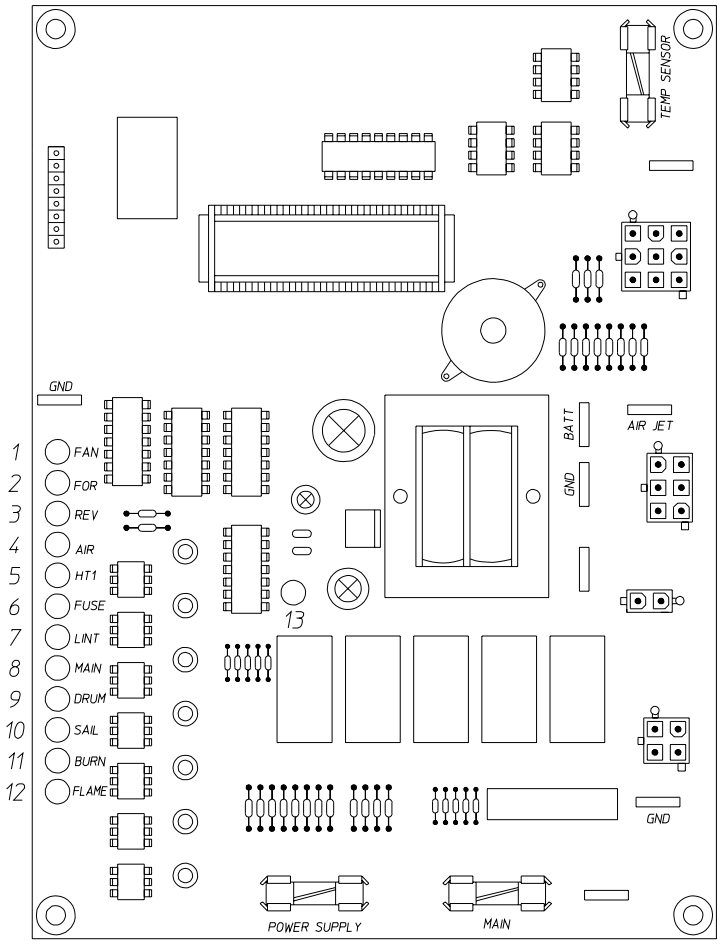

1. "FAN" (BLOWER) Output Light Emitting Diode (L.E.D.) Indicator

   a. If the dryer is started and the blower motor is not operating, yet both the Phase 6 OPL microprocessor controller (computer) display fan indicator dot and power supply input L.E.D. are on, but the fan output L.E.D. is off, then the fault is the Phase 6 OPL microprocessor controller (computer) itself.

      1) If the motor is not operating and the fan indicator dot and output L.E.D. are on then the problem (fault) is elsewhere (i.e., external of the Phase 6 OPL microprocessor controller [computer]).

2. "FOR" (FORWARD) Output L.E.D. Indicator (for optional Reversing Models ONLY)

   a. If the dryer is started and the blower motor is operating but the drive (basket [tumbler]) motor is not, yet the Phase 6 OPL microprocessor controller (computer) display "FORWARD" indicator dot is on, but the "FOR" (FORWARD) motor output L.E.D. is off; then the fault is of the Phase 6 OPL microprocessor controller (computer) itself.

      1) If the drive (basket [tumbler]) motor is not operating and the forward indicator dot and output L.E.D. is on; then the problem (fault) is elsewhere (i.e., external of the Phase 6 OPL microprocessor controller [computer]).

3. "REV" (REVERSE) Output L.E.D. Indicator (for Optional Reversing Models ONLY)

   a. If the dryer is started and the blower motor is operating but the drive (basket [tumbler]) motor is not, yet the Phase 6 OPL microprocessor controller (computer) displays "REVERSE" indicator dot is on but the "REV" (REVERSE) motor output L.E.D. is off; then the fault is of the Phase 6 microprocessor controller (computer) itself.

      1) If the drive (basket [tumbler]) motor is not operating and the reverse indicator dot and output L.E.D. is on; then the problem (fault) is elsewhere (i.e., external of the Phase 6 OPL microprocessor controller [computer]).

4. "AIR" (AIR JET) Output L.E.D. Indicator - ***OPTIONAL***

   a. "AIR" is on with the display dot at the end of the dry cycle once the display reads "dONE," it is on for approximately 60-seconds and then the output L.E.D. indicator and the display dot go out. If the air jet does not energize it is not the fault of the Phase 6 OPL microprocessor controller (computer). If the output L.E.D. or dot do not go on it is the fault of the Phase 6 OPL microprocessor controller (computer).

5. "HT1" (HEAT) Output L.E.D. Indicator

   a. If the dryer is started and there is "No Heat" yet the Phase 6 OPL microprocessor controller (computer) display heat circuit indicator dot is on, but the "HT1" output L.E.D. indicator is off; then the fault is in the Phase 6 OPL microprocessor controller (computer) itself.

      1) If the dryer is started and there is "No Heat" yet both the Phase 6 OPL microprocessor controller (computer) display indicator dots and the "HT1" output L.E.D. indicator are on; then the problem (fault) is elsewhere (i.e., external of the Phase 6 OPL microprocessor controller [computer]).

6. <u>"FUSE" (MAIN FUSE) Input Light Emitting Diode (L.E.D.) Indicator</u>

   a. **Should be** on **<u>ALL</u>** the time (even if the dryer <u>is</u> <u>not</u> running. If the L.E.D. <u>is</u> <u>not</u> on; then the display will read "CHECK MAIN FUSE." If the main fuse is good then the fault is on the Phase 6 microprocessor controller (computer).

7. <u>"LINT" (LINT DOOR) Input L.E.D. Indicator</u>

   a. **Should be** on **<u>ALL</u>** the time (unless the lint door is opened then the "LINT" L.E.D. indicator will go out).

   b. If the dryer is active (running) and the lint door is opened the "LINT" L.E.D. indicator will go out and the display will read "LINT dOOR." The dryer will stop until the Lint Drawer has been closed, at which time the L.E.D. display will read "PRESS START." At this time, to resume the drying cycle press and "ENTER/START" ⊡ Key.

8. <u>"MAIN" (MAIN DOOR) Input L.E.D. Indicator</u>

   a. **Should be** on **<u>ALL</u>** the time (unless the lint door is open or the main door is opened then the "MAIN" L.E.D. indicator will go out).

   b. If the dryer is active (running) and the main door is opened the "MAIN" L.E.D. indicator will go out and the display will read "MAIN dOOR." The dryer will stop until the Main Door has been closed, at which time the L.E.D. display will read "PRESS START." At this time, to resume the drying cycle press and "ENTER/START" ⊡ Key.

9. <u>"DRUM" (BASKET [TUMBLER] HI-LIMIT) Input L.E.D. Indicator</u>

   a. **Should be** on at **<u>ALL</u>** times (unless the basket [tumbler] hi-limit switch opens prior during the cycle while the heat was on the display would read "dRUM SAFETY FAIL"). The dryer will run with no heat for 3 minutes or until the temperature drops below 100º F. Then the dryer will shut down still displaying "dRUM SAFETY FAIL" with an audio indication.

10. <u>"SAIL" (SAIL SWITCH) Input L.E.D. Indicator</u>

    a. This routine will prevent start up on the dryer unless the sail switch is in the correct position. If the sail switch is in the closed position prior to start, the "SAIL" output L.E.D. indicator <u>will</u> <u>be</u> off, the dryer will not start and the display will read "SAIL SWITCH FAIL" along with an audio indication.

    b. If the sail switch opens during the cycle the "SAIL" output L.E.D. indicator will go out and the display will read "NO AIRFLOW." The dryer will run with no heat for 3 minutes or until the temperature drops below 100º F. Then the dryer will shut down still displaying "NO AIRFLOW" along with an audio indication.

11. <u>"BURN" (BURN HI-LIMIT) Input L.E.D. Indicator</u>

    a. This routine monitors the temperature of the burner. If the burner hi-limit opens during the cycle while the heat was on the "BURN" output L.E.D. indicator goes out and the display reads "bURNER SAFETY FAIL." The dryer will run with no heat for 3 minutes or until the temperature drops below 100º F then the dryer will shut down still displaying "bURNER SAFETY FAIL" with an audio indication.

12. "FLAME" (bURNER CONTRL FAIL) Input Light Emitting Diode (L.E.D.) Indicator

    a. This routine monitors the ignition control's gas valve output response. If the valve output signal is not present from the ignition control within the valve time limits the microprocessor determines the ignition control has failed. If this occurs when the cycle is active the "FLAME" output L.E.D. indicator will go out and the display will read "bURNER CONTRL FAIL." The dryer will run with no heat for 3 minutes or until the temp drops below 100º F. Then the dryer will shut down still displaying "bURNER CONTRL FAIL" with an audio indication.

13. "POWER SUPPLY" Input L.E.D. Indicator

    a. Should be on at **ALL** times (even if the dryer is not running). The power supply L.E.D. output indicator will not be on if the power supply fuse to the Phase 6 OPL microprocessor is not present. If the power supply fuse is bad the L.E.D. output will be off and there will be no display or keyboard (touch pad) function. The "FUSE," "LINT," "MAIN" and "DRUM" output L.E.D. indicators will remain on.